YASKAWA Electric Corporation
YAS_MEMS_27
3/2024

MEMOBUS SIO Driver

1 System Configuration 3
2 Selection of External Device 10
3 Example of Communication Setting 11
4 Setup Items 57
5 Cable Diagram 62
6 Supported Device 139
7 Device Code and Address Code 145
8 Error Messages 150

PREFACE

This manual describes how to connect the Display and the External Device (target PLC).

In this manual, the connection procedure will be described by following the below sections:

1	System Configuration This section shows the types of External Devices which can be connected and SIO type.	☞"1 System Configuration" (page 3)
2	Selection of External Device Select a model (series) of the External Device to be connected and connection method.	☞"2 Selection of External Device" (page 10)
3	Example of Communication Settings This section shows setting examples for communicating between the Display and the External Device.	☞"3 Example of Communication Setting" (page 11)
4	Setup Items This section describes communication setup items on the Display. Set communication settings of the Display with GP-Pro EX or in offline mode.	☞"4 Setup Items" (page 57)
5	Cable Diagram This section shows cables and adapters for connecting the Display and the External Device.	☞"5 Cable Diagram" (page 62)

Operation

1 System Configuration

The system configuration in the case when the External Device and the Display are connected is shown.

Series	CPU	Link I/F	SIO Type	Setting Example	Cable Diagram
Control Pack	CP-9200SH	CN1 on CP217IF	RS232C	"3.1 Setting Example 1" (page 11)	"5.1 Cable Diagram 1" (page 62)
		CN2 on CP217IF	RS232C	"3.1 Setting Example 1" (page 11)	"5.2 Cable Diagram 2" (page 65)
		CN3 on CP217IF	RS422/485 (4wire)	"3.2 Setting Example 2" (page 16)	"5.3 Cable Diagram 3" (page 67)
	CP-9200 CP-9200H	Port on the CPU unit	RS232C	"3.13 Setting Example 13" (page 53)	"5.12 Cable Diagram 12" (page 126)
MP900	MP920	PORT1, PORT2 on the CPU unit	RS232C	"3.3 Setting Example 3" (page 21)	"5.1 Cable Diagram 1" (page 62)
		CN1, CN2 on 217IF	RS232C	"3.3 Setting Example 3" (page 21)	"5.9 Cable Diagram 9" (page 112)
		CN3 on 217IF	RS422/485 (4wire)	"3.4 Setting Example 4" (page 25)	"5.4 Cable Diagram 4" (page 74)
			RS422/485 (2wire)	"3.5 Setting Example 5" (page 29)	"5.5 Cable Diagram 5" (page 81)
	MP930	PORT1, PORT2 on the CPU unit	RS232C	"3.3 Setting Example 3" (page 21)	"5.1 Cable Diagram 1" (page 62)
	MP940	PORT1 on the CPU unit	RS232C	"3.3 Setting Example 3" (page 21)	"5.6 Cable Diagram 6" (page 89)
		PORT2 on the CPU unit	RS422/485 (4wire)	"3.4 Setting Example 4" (page 25)	"5.7 Cable Diagram 7" (page 92)
			RS422/485 (2wire)	"3.5 Setting Example 5" (page 29)	"5.8 Cable Diagram 8" (page 99)

Series	CPU	Link I/F	SIO Type	Setting Example	Cable Diagram
MP2000	MP2300 MP2200 MP2310 MP2300S	Serial port on 218IF-01	RS232C	"3.6 Setting Example 6" (page 33)	"5.1 Cable Diagram 1" (page 62)
		Serial port on 218IF-02	RS232C	"3.6 Setting Example 6" (page 33)	"5.1 Cable Diagram 1" (page 62)
		Serial port on 260IF-01	RS232C	"3.6 Setting Example 6" (page 33)	"5.1 Cable Diagram 1" (page 62)
		Serial port on 261IF-01	RS232C	"3.6 Setting Example 6" (page 33)	"5.1 Cable Diagram 1" (page 62)
		PORT on 217IF-01	RS232C	"3.6 Setting Example 6" (page 33)	"5.1 Cable Diagram 1" (page 62)
		RS422/485 on 217IF-01	RS422/485 (4wire)	"3.7 Setting Example 7" (page 37)	"5.7 Cable Diagram 7" (page 92)
			RS422/485 (2wire)	"3.8 Setting Example 8" (page 41)	"5.8 Cable Diagram 8" (page 99)
MEMOCON GL	GL120	MEMOBUS port 1 on the CPU10 unit MEMOBUS port 2 on the CPU10 unit MEMOBUS port on the CPU20 unit MEMOBUS port on the CPU21 unit	RS232C	"3.9 Setting Example 9" (page 45)	"5.10 Cable Diagram10" (page 115)
		JAMSC-120NOM26100			
		JAMSC-120NOM27100	RS422/485 (4wire)	"3.10 Setting Example 10" (page 47)	"5.11 Cable Diagram 11" (page 117)
	GL130	MEMOBUS port on the CPU30 unit MEMOBUS port on the CPU35 unit	RS232C	"3.9 Setting Example 9" (page 45)	"5.10 Cable Diagram10" (page 115)
		JAMSC-120NOM26100			
		JAMSC-120NOM27100	RS422/485 (4wire)	"3.10 Setting Example 10" (page 47)	"5.11 Cable Diagram 11" (page 117)

Series	CPU	Link I/F	SIO Type	Setting Example	Cable Diagram
MEMOCON SC	U84,84J	JAMSC-C8110	RS232C	"3.11 Setting Example 11" (page 49)	"5.12 Cable Diagram 12" (page 126)
	U84S	JAMSC-C8610	RS232C	"3.11 Setting Example 11" (page 49)	"5.12 Cable Diagram 12" (page 126)
	GL40S	JAMSC-IF61 JAMSC-IF41A	RS232C	"3.11 Setting Example 11" (page 49)	"5.12 Cable Diagram 12" (page 126)
	GL60H GL70H	JAMSC-IF60 JAMSC-IF61	RS232C	"3.11 Setting Example 11" (page 49)	"5.12 Cable Diagram 12" (page 126)
	GL60S	JAMSC-IF60 JAMSC-IF61	RS232C	"3.11 Setting Example 11" (page 49)	"5.12 Cable Diagram 12" (page 126)
		JAMSC-IF612	RS422/485 (4wire)	"3.12 Setting Example 12" (page 51)	"5.13 Cable Diagram 13" (page 128)
MEMOCON Micro	Micro	Port on the CPU unit	RS232C	"3.14 Setting Example 14" (page 55)	"5.14 Cable Diagram 14" (page 137)

■ Connection Configuration

- 1:1 Connection

- 1:n Connection

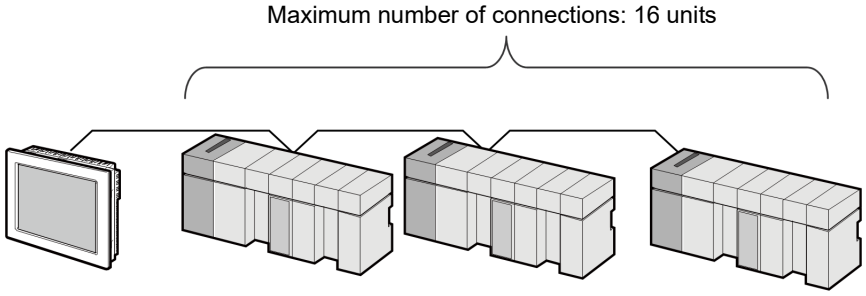

■ IPC COM Port

When connecting IPC with an External Device, the COM port used depends on the series and SIO type. Please refer to the IPC manual for details.

Usable port

Series	Usable Port		
	RS-232C	RS-422/485(4 wire)	RS-422/485(2 wire)
PS-2000B	COM1*1 , COM2, COM3*1, COM4	-	-
PS-3450A, PS-3451A, PS3000-BA, PS3001-BD	COM1, COM2*1*2	COM2*1*2	COM2*1*2
PS-3650A (T41 model), PS-3651A (T41 model)	COM1*1	-	-
PS-3650A (T42 model), PS-3651A (T42 model)	COM1*1*2, COM2	COM1*1*2	COM1*1*2
PS-3700A (Pentium®4-M) PS-3710A	COM1*1, COM2*1, COM3*2 , COM4	COM3*2	COM3*2
PS-3711A	COM1*1, COM2*2	COM2*2	COM2*2
PS4000*3	COM1, COM2	-	-
PL3000	COM1*1*2, COM2*1, COM3, COM4	COM1*1*2	COM1*1*2
PE-4000B Atom N270	COM1, COM2	-	-
PE-4000B Atom N2600	COM1, COM2	COM3*4 , COM4*4, COM5*4, COM6*4	COM3*4, COM4*4, COM5*4, COM6*4
PS5000 (Slim Panel Type Core i3 Model) *5 *6	COM1, COM2*4	COM2*4	COM2*4
PS5000 (Slim Panel Type Atom Model) *5 *6	COM1, COM2*7	COM2*7	COM2*7
PS5000 (Enclosed Panel Type)*8	COM1	-	-
PS5000 (Modular Type PFXPU/PFXPP)*5 *6 PS5000 (Modular Type PFXPL2B5-6)	COM1*7	COM1*7	COM1*7
PS5000 (Modular Type PFXPL2B1-4)	COM1, COM2*7	COM2*7	COM2*7
PS6000 (Advanced Box) PS6000 (Standard Box)	COM1*9	*10	*10
PS6000 (Basic Box)	COM1*9	COM1*9	COM1*9

*1 The RI/5V can be switched. Use the IPC's switch to change if necessary.

*2 Set up the SIO type with the DIP Switch. Please set up as follows according to SIO type to be used.

*3 When making communication between an External Device and COM port on the Expansion slot, only RS-232C is supported. However, ER (DTR/CTS) control cannot be executed because of the specification of COM port.
For connection with External Device, use user-created cables and disable Pin Nos. 1, 4, 6 and 9.
Please refer to the IPC manual for details of pin layout.

*4 Set up the SIO type with the BIOS. Please refer to the IPC manual for details of BIOS.

*5 When setting up communication between an External Device and the RS-232C/422/485 interface module, use the IPC (RS-232C) or PS5000 (RS-422/485) cable diagrams. However, when using PFXZPBMPR42P2 in a RS-422/485 (4-wire) configuration with no flow control, connect 7.RTS+ and 8.CTS+, and connect 6.RTS- and 9.CTS-.
When using RS-422/485 communication with External Devices, you may need to reduce the transmission speed and increase the TX Wait time.

*6 To use RS-422/485 communication on the RS-232C/422/485 interface module, the DIP Switch setting is required. Please refer to "Knowledge Base" (FAQs) on the support site. (http://www.pro-face.com/trans/en/manual/1001.html)

Settings	FAQ ID
PFXZPBMPR42P2, RS422/485 change method	FA263858
PFXZPBMPR42P2 termination resistor setting	FA263974
PFXZPBMPR44P2, RS422/485 change method	FA264087
PFXZPBMPR44P2 termination resistor setting	FA264088

*7 Set up the SIO type with the DIP Switch. Please refer to the IPC manual for details of DIP Switch. The BOX Atom has not a switch to set the RS-232C, RS-422/485 mode. Use the BIOS for the setting.

*8 For the connection with the External Device, on the user-created cable read as if the connector on the Display-side is a M12 A-coding 8 pin socket. The pin assignment is the same as described in the cable diagram. For the M12 A-coding connector, use PFXZPSCNM122.

*9 In addition to COM1, you can also use the COM port on the optional interface.

*10 Install the optional interface in the expansion slot.

DIP Switch settings (PL3000 / PS3000 Series)

RS-232C

DIP Switch	Setting	Description
1	OFF*1	Reserved (always OFF)
2	OFF	SIO type: RS-232C
3	OFF	
4	OFF	Output mode of SD (TXD) data: Always output
5	OFF	Terminal resistance (220Ω) insertion to SD (TXD): None
6	OFF	Terminal resistance (220Ω) insertion to RD (RXD): None
7	OFF	Short-circuit of SDA (TXA) and RDA (RXA): Not available
8	OFF	Short-circuit of SDB (TXB) and RDB (RXB): Not available
9	OFF	RS (RTS) Auto control mode: Disabled
10	OFF	

*1 When using PS-3450A, PS-3451A, PS3000-BA and PS3001-BD, turn ON the set value.

RS-422/485 (4 wire)

DIP Switch	Setting	Description
1	OFF	Reserved (always OFF)
2	ON	SIO type: RS-422/485
3	ON	
4	OFF	Output mode of SD (TXD) data: Always output
5	OFF	Terminal resistance (220Ω) insertion to SD (TXD): None
6	OFF	Terminal resistance (220Ω) insertion to RD (RXD): None
7	OFF	Short-circuit of SDA (TXA) and RDA (RXA): Not available
8	OFF	Short-circuit of SDB (TXB) and RDB (RXB): Not available
9	OFF	RS (RTS) Auto control mode: Disabled
10	OFF	

RS-422/485 (2 wire)

DIP Switch	Setting	Description
1	OFF	Reserved (always OFF)
2	ON	SIO type: RS-422/485
3	ON	
4	OFF	Output mode of SD (TXD) data: Always output
5	OFF	Terminal resistance (220Ω) insertion to SD (TXD): None
6	OFF	Terminal resistance (220Ω) insertion to RD (RXD): None
7	ON	Short-circuit of SDA (TXA) and RDA (RXA): Available
8	ON	Short-circuit of SDB (TXB) and RDB (RXB): Available
9	ON	RS (RTS) Auto control mode: Enabled
10	ON	

2 Selection of External Device

Select the External Device to be connected to the Display.

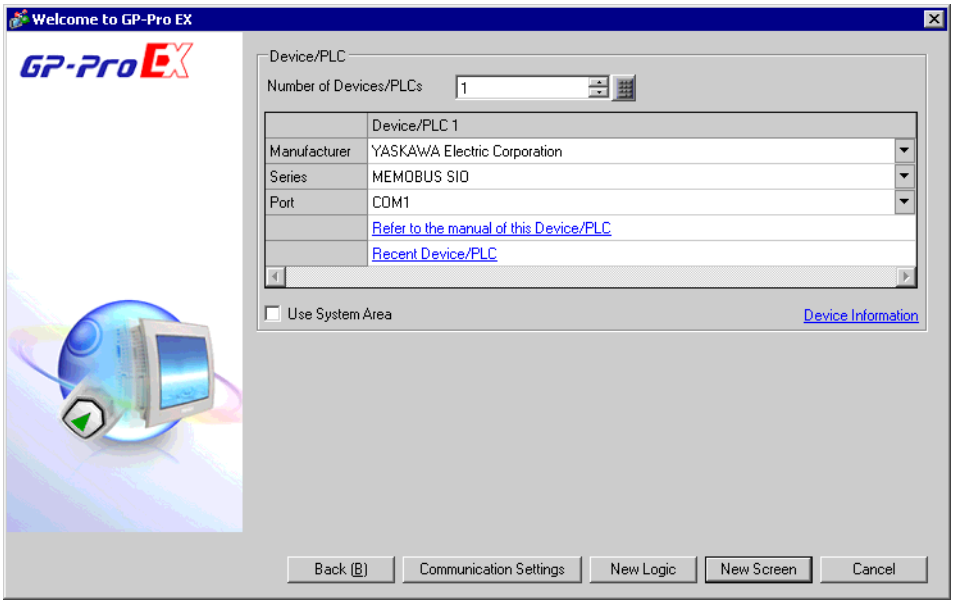

Setup Items	Setup Description
Number of Devices/ PLCs	Enter an integer from 1 to 4 to define the number of Devices/PLCs to connect to the display.
Manufacturer	Select the manufacturer of the External Device to connect. Select "YASKAWA Electric Corporation".
Series	Select the External Device model (series) and the connection method. Select "MEMOBUS SIO". In System configuration, make sure the External Device you are connecting is supported by "MEMOBUS SIO". ☞ "1 System Configuration" (page 3)
Port	Select the Display port to connect to the External Device.
Use System Area	Check this option to synchronize the system data area of the Display and the device (memory) of the External Device. When synchronized, you can use the External Device's ladder program to switch the display or display the window on the Display. Cf. GP-Pro EX Reference Manual "LS Area (Direct Access Method Area)" This feature can also be set in GP-Pro EX or in the Display's offline mode. Cf. GP-Pro EX Reference Manual "System Settings [Display Unit] - [System Area] Settings Guide" Cf. Maintenance/Troubleshooting Guide "Main Unit - System Area Settings"

3 Example of Communication Setting

Examples of communication settings of the Display and the External Device, recommended by Pro-face, are shown.

3.1 Setting Example 1

■ Settings of GP-Pro EX

◆ Communication Settings

To display the setup screen, from the [Project] menu, point to [System Settings] and select [Device/PLC].

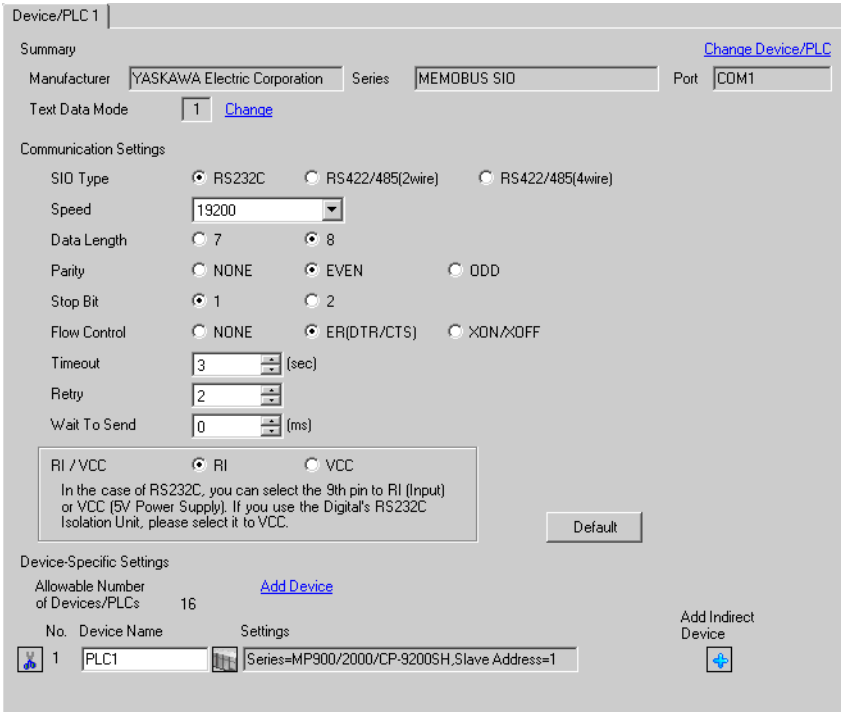

◆ Device Setting

To display the [Individual Device Settings] dialog box, from [Device-Specific Settings] in the [Device/PLC] window, select the external device and click [Settings] .

To connect multiple External Devices, from [Device-Specific Settings] in the [Device/PLC] window, click [Add Device] to add another External Device.

◆ Notes

- When you connect 217IF of which version is "*****_21700_*****" or lower to the Display, set [Wait To Send] to [20ms].

■ Settings of External Device

◆ Ladder Software Setting

1 Right-click [root] in the browser of the ladder software "CP717" and select [Group Folder] from [New].

NOTE
- Please refer to the manual of the ladder software for the version which supports the Control Pack Series.

2 The [New] dialog box is displayed. Enter the optional group name (ex. "GROUP") and click [OK].

3 The group folder (ex. "GROUP") is created under the [root] in the browser of "CP717". Right-click the folder and select [Order Folder] from [New].

4 The [New] dialog box is displayed. Enter the optional order name (ex. "ORDER") and click [OK].

5 [ORDER] is created under the [root]-[GROUP] in the browser of "CP717". Right-click it and select [PLC Type] from [New].

6 The [PLC Type] dialog box is displayed. Enter the optional PLC name and CPU name and select [CP-9200SH] for [Device Name], then click [OK].

7 The PLC folder (ex. "PLC") is created under the [root]-[GROUP] in the browser of "CP717". The CPU folder (ex. "CPU1") is created under the PLC folder. Double-click [CPU1] to display the [CPU Logon] dialog box.

8 Enter "User name" and "Password" optionally in the [CPU Logon] dialog box and click [OK].

9 Multiple folders are created under the [root]-[GROUP]-[PLC]-[CPU1] in the browser of "CP717". Double-click [Definition Folder]-[Module Configuration] to open the [Engineering Manager] window.

10 Select [CP-9200SH] in [Module] of the [No.00] field in the [Rack1] tab.

11 Select [CP-217] in [Module] of the same [No.] field as your slot number to define the link unit.

12 Double-click the same [No.] as your slot number to display the setting window.

Setup Items	Setup Description
Transmission Protocol	Memobus
Master/Slave	Slave
Device address	Device address of the External Device
Serial I/F	RS-232C
Transmission Mode	RTU
Data Length	8Bit
Parity Bit	even
Stop Bit	1Stop
Baud Rate	19.2K
Send Delay	Not specified

◆ Example of Ladder Program

You need the ladder program to connect the Display to the Link I/F CP217IF by YASKAWA Electric Corporation. The ladder program example is shown below.

NOTE

- This ladder program example enables to communicate the 1 CN port with the Display. Note that each CN port requires the ladder program when you use multiple ports, CN1 to CN3, to communicate simultaneously.
- Use the ladder software to perform the communication settings on the External Device. Those settings are not performed in this ladder program.

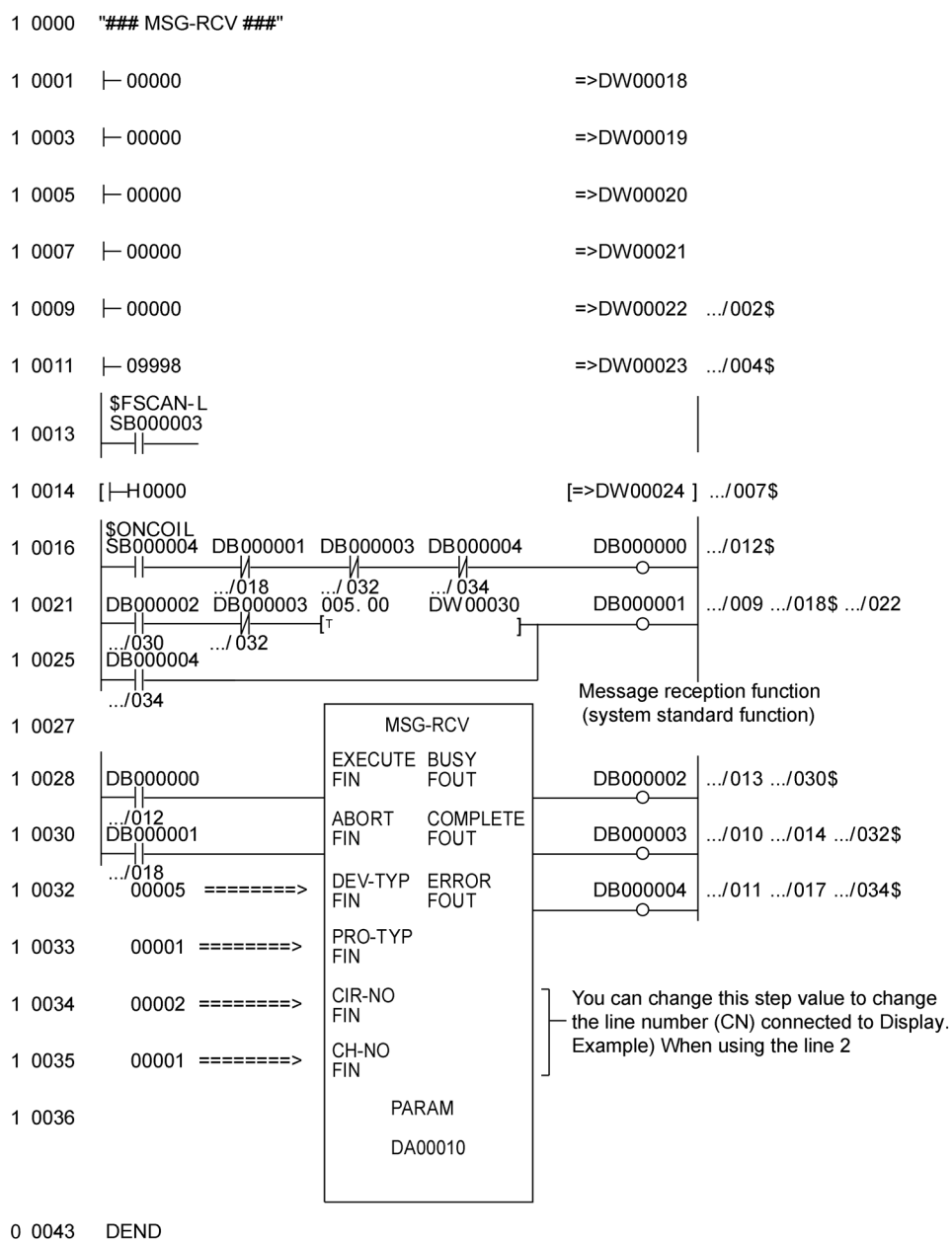

◆ Notes

- Please refer to the manual of the ladder software for more detail on other setting description.

3.2 Setting Example 2

■ Settings of GP-Pro EX

◆ Communication Settings

To display the setup screen, from the [Project] menu, point to [System Settings] and select [Device/PLC].

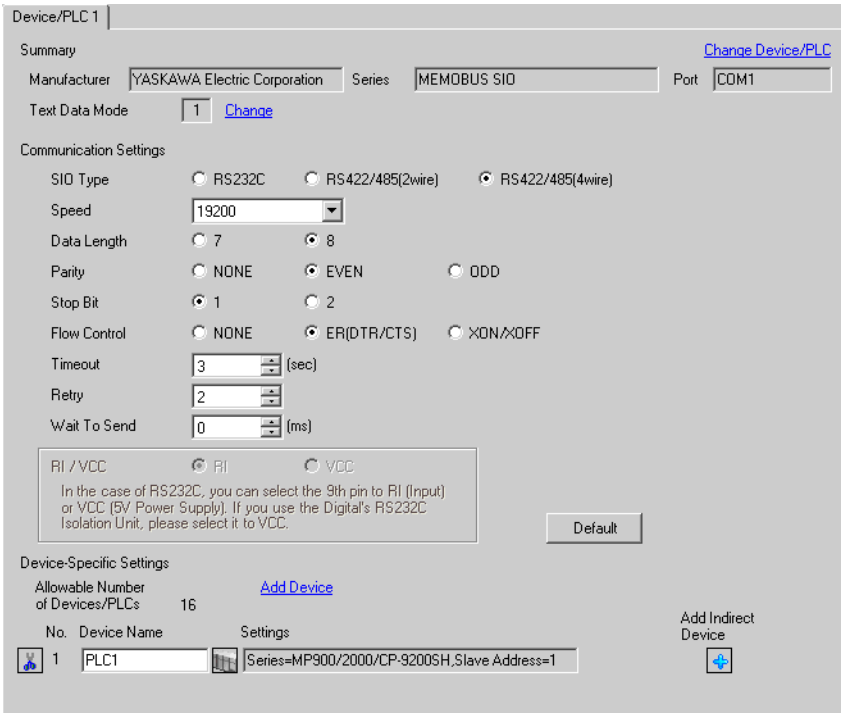

◆ Device Setting

To display the [Individual Device Settings] dialog box, from [Device-Specific Settings] in the [Device/PLC] window, select the external device and click [Settings] .

To connect multiple External Devices, from [Device-Specific Settings] in the [Device/PLC] window, click [Add Device] to add another External Device.

◆ Notes

- When you connect 217IF of which version is "*****_21700_*****" or lower to the Display, set [Wait To Send] to [20ms].

■ Settings of External Device

◆ Ladder Software Setting

1 Right-click [root] in the browser of the ladder software "CP717" and select [Group Folder] from [New].

NOTE
- Please refer to the manual of the ladder software for the version which supports the Control Pack Series.

2 The [New] dialog box is displayed. Enter the optional group name (ex. "GROUP") and click [OK].

3 The group folder (ex. "GROUP") is created under the [root] in the browser of "CP717". Right-click the folder and select [Order Folder] from [New].

4 The [New] dialog box is displayed. Enter the optional order name (ex. "ORDER") and click [OK].

5 [ORDER] is created under the [root]-[GROUP] in the browser of "CP717". Right-click it and select [PLC Type] from [New].

6 The [PLC Type] dialog box is displayed. Enter the optional PLC name and CPU name and select [CP-9200SH] for [Device Name], then click [OK].

7 The PLC folder (ex. "PLC") is created under the [root]-[GROUP] in the browser of "CP717". The CPU folder (ex. "CPU1") is created under the PLC folder. Double-click [CPU1] to display the [CPU Logon] dialog box.

8 Enter "User name" and "Password" optionally in the [CPU Logon] dialog box and click [OK].

9 Multiple folders are created under the [root]-[GROUP]-[PLC]-[CPU1] in the browser of "CP717". Double-click [Definition Folder]-[Module Configuration] to open the [Engineering Manager] window.

10 Select [CP-9200SH] in [Module] of the [No.00] field in the [Rack1] tab.

11 Select [CP-217] in [Module] of the same [No.] field as your slot number to define the link unit.

12 Double-click the same [No.] as your slot number to display the setting window.

Setup Items	Setup Description
Transmission Protocol	Memobus
Master/Slave	Slave
Device address	Device address of the External Device
Serial I/F	RS-485
Transmission Mode	RTU
Data Length	8Bit
Parity Bit	even
Stop Bit	1Stop
Baud Rate	19.2K
Send Delay	Not specified

◆ Example of Ladder Program

You need the ladder program to connect the Display to the Link I/F CP217IF by YASKAWA Electric Corporation. The ladder program example is shown below.

NOTE

- This ladder program example enables to communicate the 1 CN port with the Display. Note that each CN port requires the ladder program when you use multiple ports, CN1 to CN3, to communicate simultaneously.
- Use the ladder software to perform the communication settings on the External Device. Those settings are not performed in this ladder program.

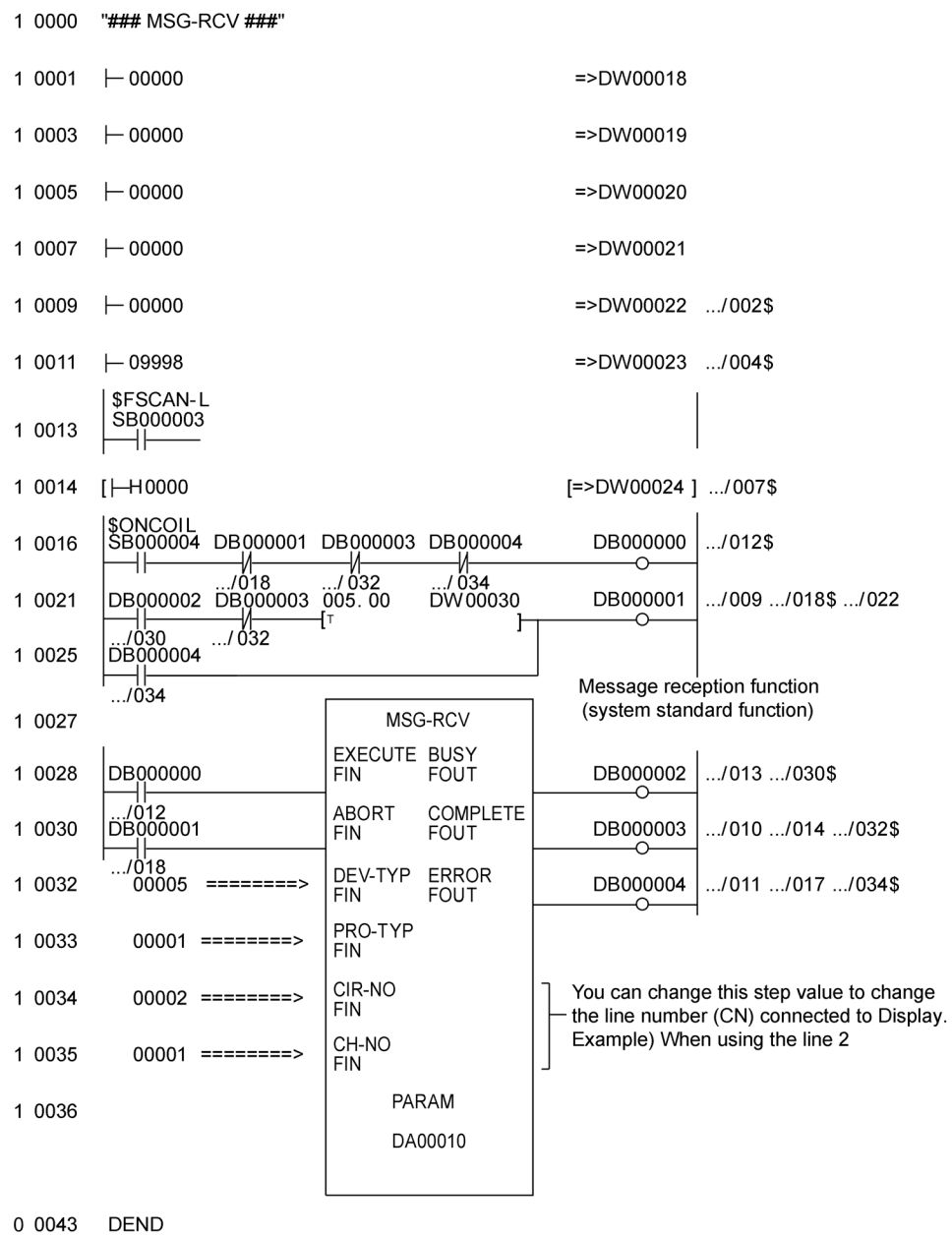

◆ Notes

- Please refer to the manual of the ladder software for more detail on other setting description.

3.3 Setting Example 3

■ Settings of GP-Pro EX

◆ Communication Settings

To display the setup screen, from the [Project] menu, point to [System Settings] and select [Device/PLC].

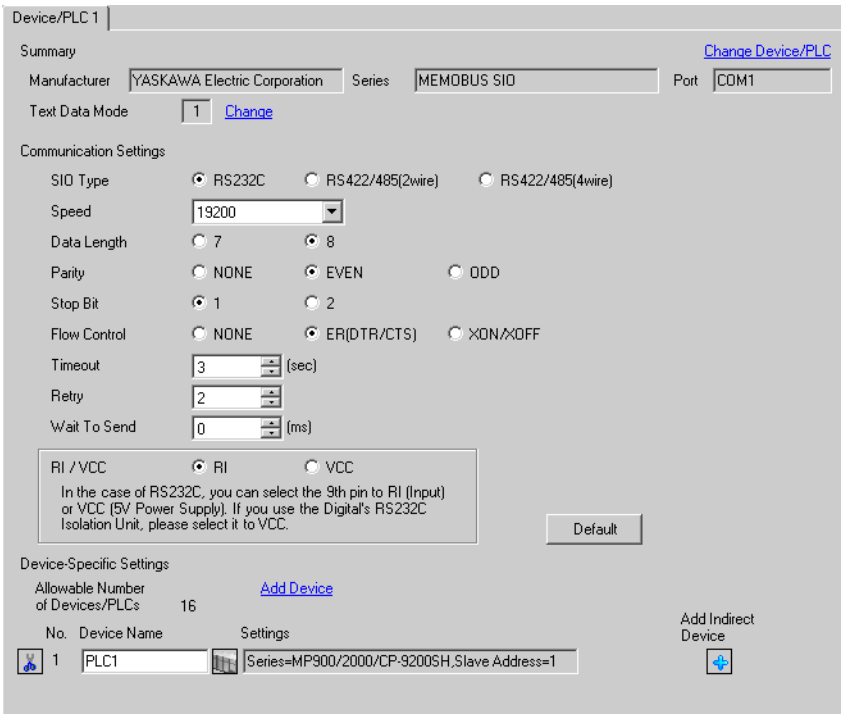

◆ Device Setting

To display the [Individual Device Settings] dialog box, from [Device-Specific Settings] in the [Device/PLC] window, select the external device and click [Settings] .

To connect multiple External Devices, from [Device-Specific Settings] in the [Device/PLC] window, click [Add Device] to add another External Device.

■ Settings of External Device

◆ Ladder Software Setting

1 Right-click [root] in the browser of the ladder software "MPE720" and select [Group Folder] from [New].

2 The [New] dialog box is displayed. Enter the optional group name (ex. "GROUP") and click [OK].

3 The group folder (ex. "GROUP") is created under the [root] in the browser of "MPE720". Right-click the folder and select [Order Folder] from [New].

4 The [New] dialog box is displayed. Enter the optional order name (ex. "ORDER") and click [OK].

5 [ORDER] is created under the [root]-[GROUP] in the browser of "MPE720". Right-click it and select [PLC Type] from [New].

6 The [PLC Type] dialog box is displayed. Enter the optional PLC name and CPU name and select your External Device for [Device Name], then click [OK].

7 The PLC folder (ex. "PLC") is created under the [root]-[GROUP] in the browser of "MPE720". The CPU folder (ex. "CPU1") is created under the PLC folder. Double-click [CPU1] to display the [CPU Logon] dialog box.

8 Enter "User name" and "Password" optionally in the [CPU Logon] dialog box and click [OK].

9 Multiple folders are created under the [root]-[GROUP]-[PLC]-[CPU1] in the browser of "MPE720". Double-click [Definition Folder]-[Module Configuration] to open the [Engineering Manager] window.

10 Select your link unit in [Module] of the [No.00] field in the [Rack1] tab.

11 Double-click the same [No.] field as your slot number to display the setting window.

Setup Items	Setup Description
Transmission Protocol	Memobus
Master/Slave	Slave
Device address	Device address of the External Device
Serial I/F	RS-232C
Transmission Mode	RTU
Data Length	8Bit
Parity Bit	even
Stop Bit	1Stop
Baud Rate	19.2K
Send Delay	Not specified
Auto Reception*1	Not specified

*1 When [Auto Reception] is set to [Not specified], the ladder program is required to communicate the Display with the External Device. It is not required in case of [Specified].

◆ Example of Ladder Program

NOTE

- The ladder program is required when connecting the Display to CN1, CN2, CN3 on the transmission module CP-217IF by YASKAWA Electric Corporation, or to the memobus port (port1, port2) on the CPU.
- This ladder program example enables to communicate the 1 connecting port with the Display. Note that each connecting port requires the ladder program when you use multiple connecting ports to communicate simultaneously.
- Use the ladder software to perform the communication settings on the External Device. Those settings are not performed in this ladder program.

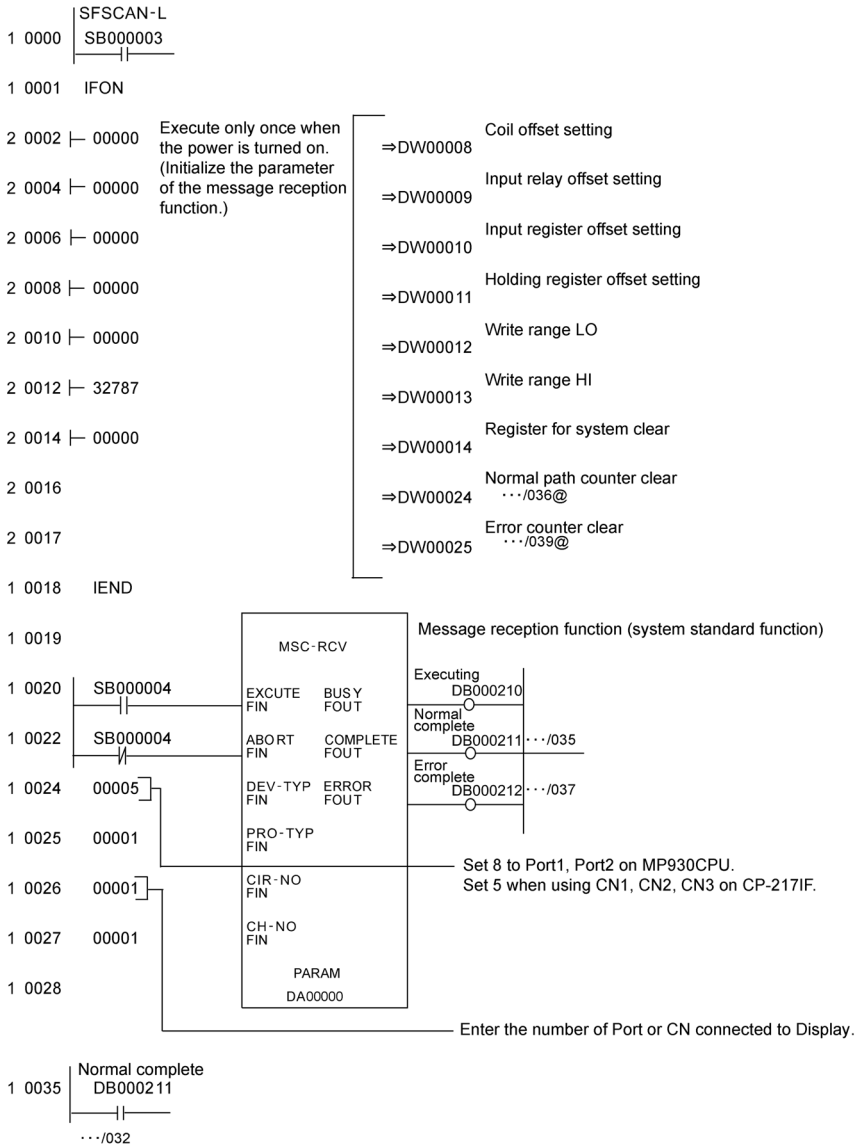

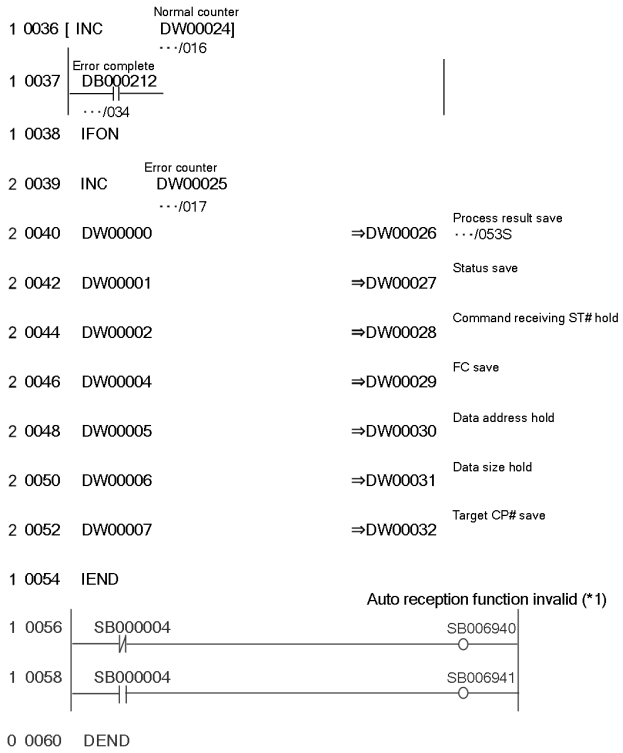

NOTE

- To communicate with the invalid auto reception function on port 1 or port 2 of the MP920 series CPU unit, "Auto reception function invalid (*1)" of the above ladder program example is needed.
  In the above ladder program example, the auto reception function of port 1 becomes invalid. To make the auto reception function of port 2 invalid, change SB006490, SB006941 of the "Auto reception function invalid (*1)" to SB006950 and SB006951.

◆ Notes

Please refer to the manual of the ladder software for more detail on other setting description.

3.4 Setting Example 4

■ Settings of GP-Pro EX

◆ Communication Settings

To display the setup screen, from the [Project] menu, point to [System Settings] and select [Device/PLC].

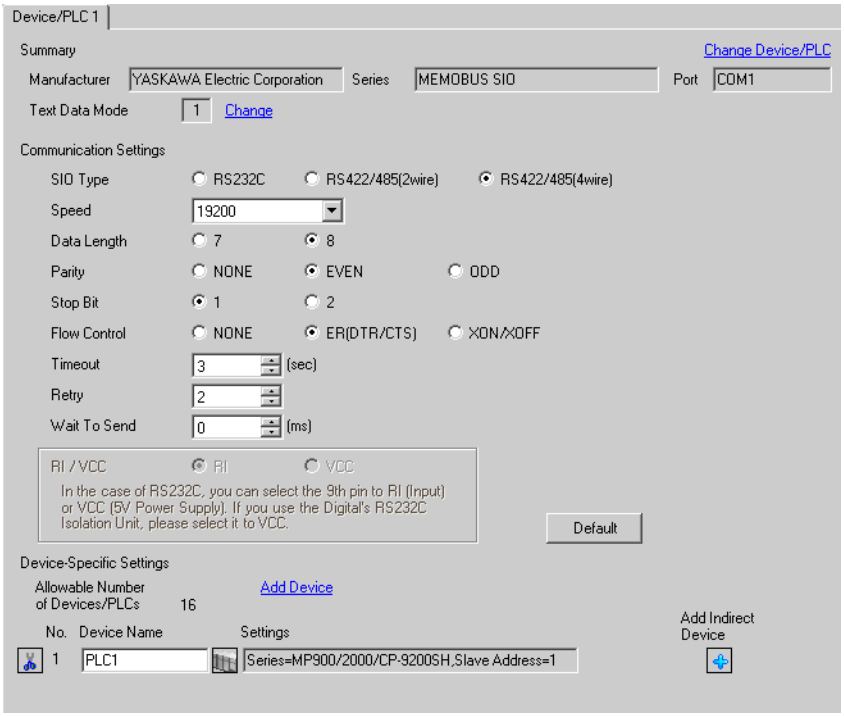

◆ Device Setting

To display the [Individual Device Settings] dialog box, from [Device-Specific Settings] in the [Device/PLC] window, select the external device and click [Settings] .

To connect multiple External Devices, from [Device-Specific Settings] in the [Device/PLC] window, click [Add Device] to add another External Device.

■ Settings of External Device

◆ Ladder Software Setting

1 Right-click [root] in the browser of the ladder software "MPE720" and select [Group Folder] from [New].

2 The [New] dialog box is displayed. Enter the optional group name (ex. "GROUP") and click [OK].

3 The group folder (ex. "GROUP") is created under the [root] in the browser of "MPE720". Right-click the folder and select [Order Folder] from [New].

4 The [New] dialog box is displayed. Enter the optional order name (ex. "ORDER") and click [OK].

5 [ORDER] is created under the [root]-[GROUP] in the browser of "MPE720". Right-click it and select [PLC Type] from [New].

6 The [PLC Type] dialog box is displayed. Enter the optional PLC name and CPU name and select your External Device for [Device Name], then click [OK].

7 The PLC folder (ex. "PLC") is created under the [root]-[GROUP] in the browser of "MPE720". The CPU folder (ex. "CPU1") is created under the PLC folder. Double-click [CPU1] to display the [CPU Logon] dialog box.

8 Enter "User name" and "Password" optionally in the [CPU Logon] dialog box and click [OK].

9 Multiple folders are created under the [root]-[GROUP]-[PLC]-[CPU1] in the browser of "MPE720". Double-click [Definition Folder]-[Module Configuration] to open the [Engineering Manager] window.

10 Select your link unit in [Module] of the [No.00] field in the [Rack1] tab.

11 Double-click the same [No.] field as your slot number to display the setting window.

Setup Items	Setup Description
Transmission Protocol	Memobus
Master/Slave	Slave
Device address	Device address of the External Device
Serial I/F	RS-485
Transmission Mode	RTU
Data Length	8Bit
Parity Bit	even
Stop Bit	1Stop
Baud Rate	19.2K
Send Delay	Not specified
Auto Reception*1	Not specified

*1 When [Auto Reception] is set to [Not specified], the ladder program is required to communicate the Display with the External Device. It is not required in case of [Specified].

◆ Example of Ladder Program

NOTE

- The ladder program is required when connecting the Display to CN1, CN2, CN3 on the transmission module CP-217IF by YASKAWA Electric Corporation, or to the memobus port (port1, port2) on the CPU.
- This ladder program example enables to communicate the 1 connecting port with the Display. Note that each connecting port requires the ladder program when you use multiple connecting ports to communicate simultaneously.
- Use the ladder software to perform the communication settings on the External Device. Those settings are not performed in this ladder program.

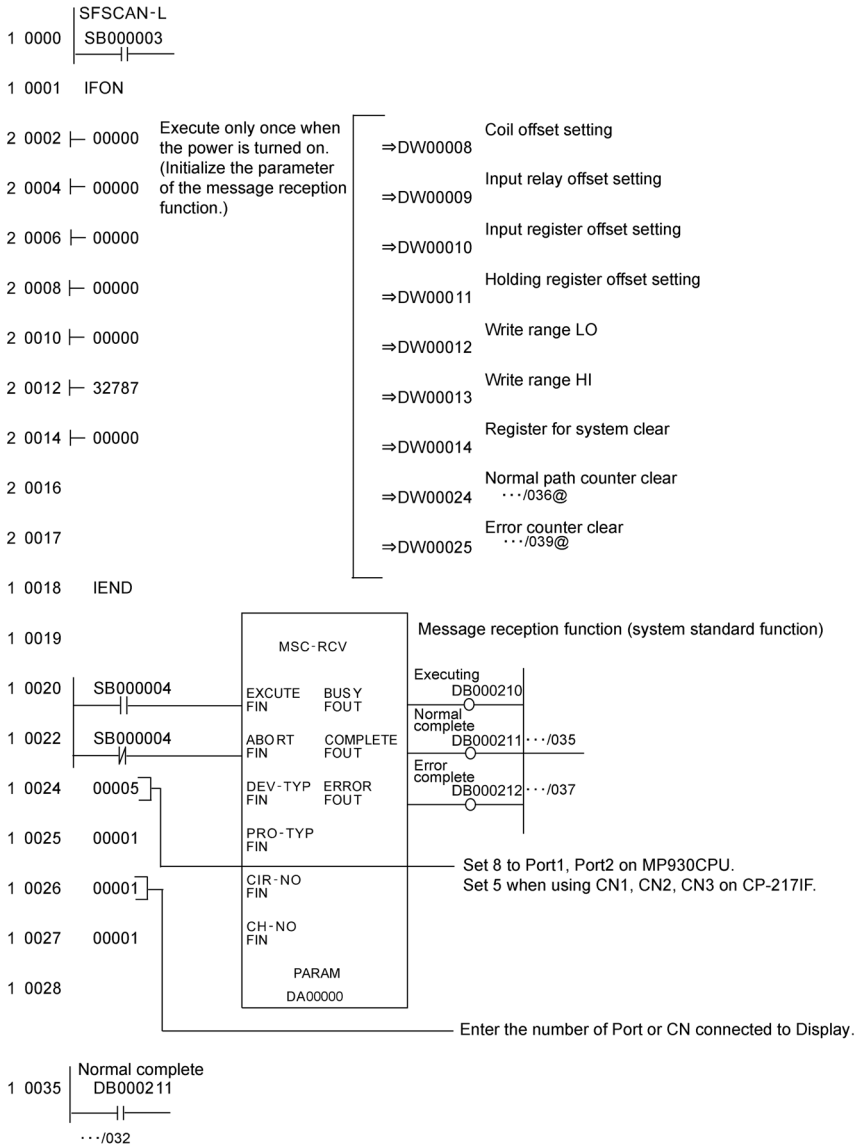

```
                                Normal counter
1 0036  [ INC                    DW 00024 ]
                                 ･･･/016
        |
        | Error complete
1 0037  |  DB 000212
        |  ─────┤├─────
        |  ･･･/034
1 0038  IFON

                                Error counter
2 0039  INC                      DW 00025
                                 ･･･/017
                                                                Process result save
2 0040  DW 00000                                  ⇒DW 00026     ･･･/053S

                                                                Status save
2 0042  DW 00001                                  ⇒DW 00027

                                                                Command receiving ST# hold
2 0044  DW 00002                                  ⇒DW 00028

                                                                FC save
2 0046  DW 00004                                  ⇒DW 00029

                                                                Data address hold
2 0048  DW 00005                                  ⇒DW 00030

                                                                Data size hold
2 0050  DW 00006                                  ⇒DW 00031

                                                                Target CP# save
2 0052  DW 00007                                  ⇒DW 00032

1 0054  IEND

0 0055  DEND
```

◆ Notes

Please refer to the manual of the ladder software for more detail on other setting description.

3.5 Setting Example 5

■ Settings of GP-Pro EX

◆ Communication Settings

To display the setup screen, from the [Project] menu, point to [System Settings] and select [Device/PLC].

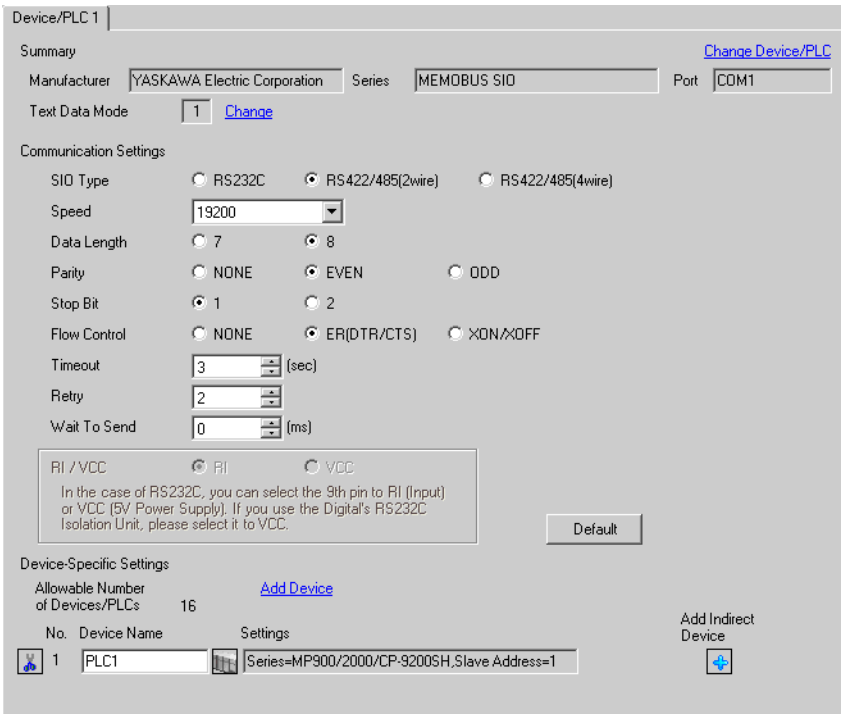

◆ Device Setting

To display the [Individual Device Settings] dialog box, from [Device-Specific Settings] in the [Device/PLC] window, select the external device and click [Settings] .

To connect multiple External Devices, from [Device-Specific Settings] in the [Device/PLC] window, click [Add Device] to add another External Device.

■ Settings of External Device

◆ Ladder Software Setting

1 Right-click [root] in the browser of the ladder software "MPE720" and select [Group Folder] from [New].

2 The [New] dialog box is displayed. Enter the optional group name (ex. "GROUP") and click [OK].

3 The group folder (ex. "GROUP") is created under the [root] in the browser of "MPE720". Right-click the folder and select [Order Folder] from [New].

4 The [New] dialog box is displayed. Enter the optional order name (ex. "ORDER") and click [OK].

5 [ORDER] is created under the [root]-[GROUP] in the browser of "MPE720". Right-click it and select [PLC Type] from [New].

6 The [PLC Type] dialog box is displayed. Enter the optional PLC name and CPU name and select your External Device for [Device Name], then click [OK].

7 The PLC folder (ex. "PLC") is created under the [root]-[GROUP] in the browser of "MPE720". The CPU folder (ex. "CPU1") is created under the PLC folder. Double-click [CPU1] to display the [CPU Logon] dialog box.

8 Enter "User name" and "Password" optionally in the [CPU Logon] dialog box and click [OK].

9 Multiple folders are created under the [root]-[GROUP]-[PLC]-[CPU1] in the browser of "MPE720". Double-click [Definition Folder]-[Module Configuration] to open the [Engineering Manager] window.

10 Select your link unit in [Module] of the [No.00] field in the [Rack1] tab.

11 Double-click the same [No.] field as your slot number to display the setting window.

Setup Items	Setup Description
Transmission Protocol	Memobus
Master/Slave	Slave
Device address	Device address of the External Device
Serial I/F	RS-485
Transmission Mode	RTU
Data Length	8Bit
Parity Bit	even
Stop Bit	1Stop
Baud Rate	19.2K
Send Delay	Not specified
Auto Reception*1	Not specified

*1 When [Auto Reception] is set to [Not specified], the ladder program is required to communicate the Display with the External Device. It is not required in case of [Specified].

◆ Example of Ladder Program

NOTE

- The ladder program is required when connecting the Display to CN1, CN2, CN3 on the transmission module CP-217IF by YASKAWA Electric Corporation, or to the memobus port (port1, port2) on the CPU.
- This ladder program example enables to communicate the 1 connecting port with the Display. Note that each connecting port requires the ladder program when you use multiple connecting ports to communicate simultaneously.
- Use the ladder software to perform the communication settings on the External Device. Those settings are not performed in this ladder program.

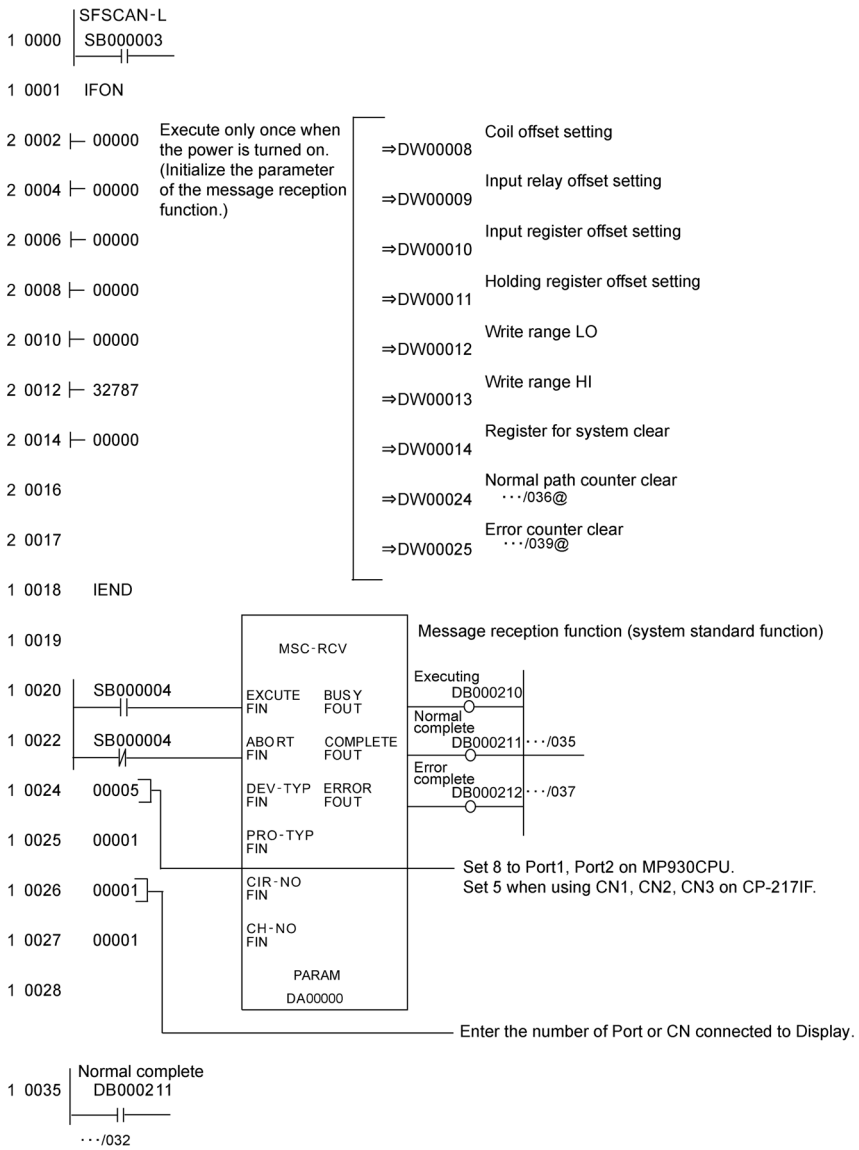

```
                                Normal counter
1 0036  [ INC                    DW 00024 ]
                                 ･･･/016
        |
        | Error complete
1 0037  |  DB 000212
        |  ─────┤├─────
        |  ･･･/034
1 0038  IFON

                                Error counter
2 0039  INC                      DW 00025
                                 ･･･/017
                                                                Process result save
2 0040  DW 00000                                  ⇒DW 00026     ･･･/053S

                                                                Status save
2 0042  DW 00001                                  ⇒DW 00027

                                                                Command receiving ST# hold
2 0044  DW 00002                                  ⇒DW 00028

                                                                FC save
2 0046  DW 00004                                  ⇒DW 00029

                                                                Data address hold
2 0048  DW 00005                                  ⇒DW 00030

                                                                Data size hold
2 0050  DW 00006                                  ⇒DW 00031

                                                                Target CP# save
2 0052  DW 00007                                  ⇒DW 00032

1 0054  IEND

0 0055  DEND
```

◆ Notes

Please refer to the manual of the ladder software for more detail on other setting description.

3.6 Setting Example 6

■ Settings of GP-Pro EX

◆ Communication Settings

To display the setup screen, from the [Project] menu, point to [System Settings] and select [Device/PLC].

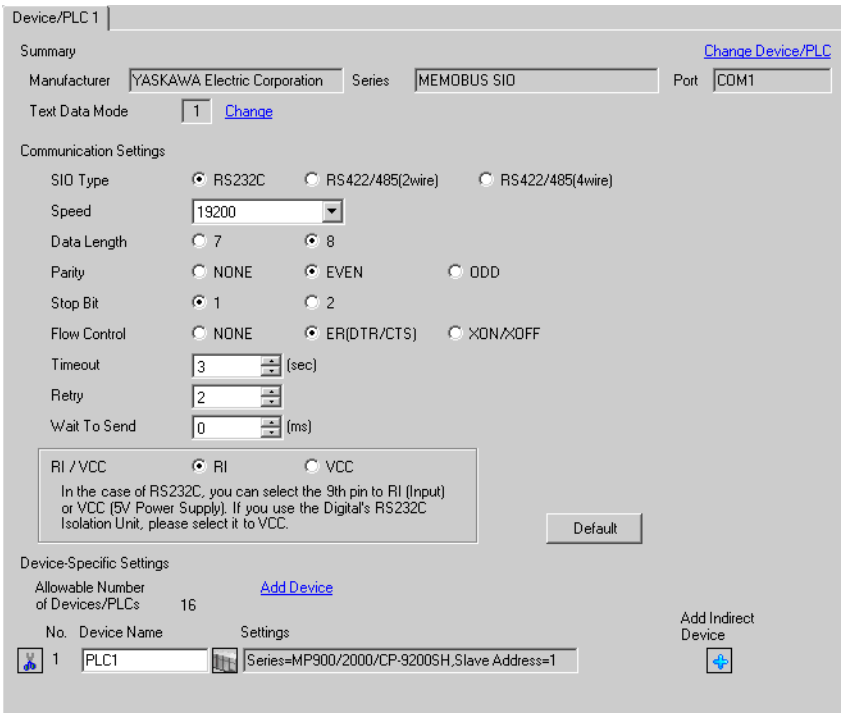

◆ Device Setting

To display the [Individual Device Settings] dialog box, from [Device-Specific Settings] in the [Device/PLC] window, select the external device and click [Settings] .

To connect multiple External Devices, from [Device-Specific Settings] in the [Device/PLC] window, click [Add Device] to add another External Device.

■ Settings of External Device

◆ Ladder Software Setting

1 Right-click [root] in the browser of the ladder software "MPE720" and select [Group Folder] from [New].
2 The [New] dialog box is displayed. Enter the optional group name (ex. "GROUP") and click [OK].
3 The group folder (ex. "GROUP") is created under the [root] in the browser of "MPE720". Right-click the folder and select [Order Folder] from [New].
4 The [New] dialog box is displayed. Enter the optional order name (ex. "ORDER") and click [OK].
5 [ORDER] is created under the [root]-[GROUP] in the browser of "MPE720". Right-click it and select [PLC Type] from [New].
6 The [PLC Type] dialog box is displayed. Enter the optional PLC name (ex. "PLC") and select your External Device for [Device Name], then click [OK].
7 The PLC folder (ex. "PLC") is created under the [root]-[GROUP] in the browser of "MPE720". Double-click [PLC] to display the [CPU Logon] dialog box.
8 Enter "User name" and "Password" optionally in the [CPU Logon] dialog box and click [OK].
9 Multiple folders are created under the [root]-[GROUP]-[PLC] in the browser of "MPE720". Double-click [Definition Folder]-[Module Configuration] to open the [Engineering Manager] window.
10 Select your link unit in [Module] of the same [No.] field as your slot number in [Controller].
11 Double-click the same [No.] field as your slot number to display the setting window.

Setup Items	Setup Description
Transmission Protocol	Memobus
Master/Slave	Slave
Device address	Device address of the External Device
Serial I/F	RS-232C
Transmission Mode	RTU
Data Length	8Bit
Parity Bit	even
Stop Bit	1Stop
Baud Rate	19.2K
Send Delay	Not specified
Auto Reception*1	Not specified

*1 When [Auto Reception] is set to [Not specified], the ladder program is required to communicate the Display with the External Device. It is not required in case of [Specified].

◆ Example of Ladder Program

NOTE

- This ladder program example enables to communicate the 1 connecting port with the Display. Note that each connecting port requires the ladder program when you use multiple connecting ports to communicate simultaneously.
- Note that each connector requires the ladder program when you connect the RS232C connector, the RS422 connector on 217IF-01, the RS232C connector on 218IF-01, and the RS232C connector on 218IF-02 simultaneously.
- Use the ladder software to perform the communication settings on the External Device. Those settings are not performed in this ladder program.

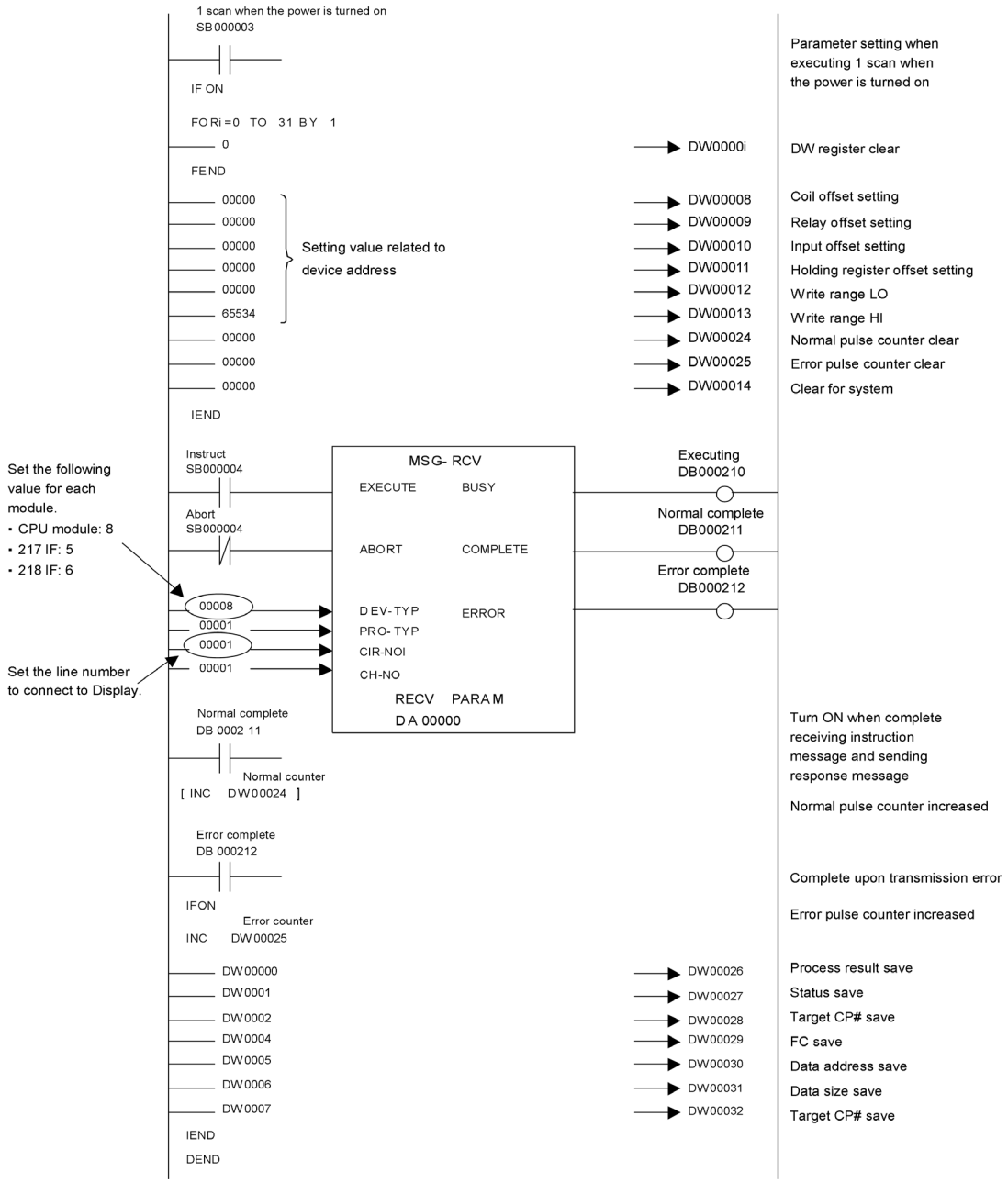

◆ Notes

- Please refer to the manual of the ladder software for more detail on other setting description.

3.7 Setting Example 7

■ Settings of GP-Pro EX

◆ Communication Settings

To display the setup screen, from the [Project] menu, point to [System Settings] and select [Device/PLC].

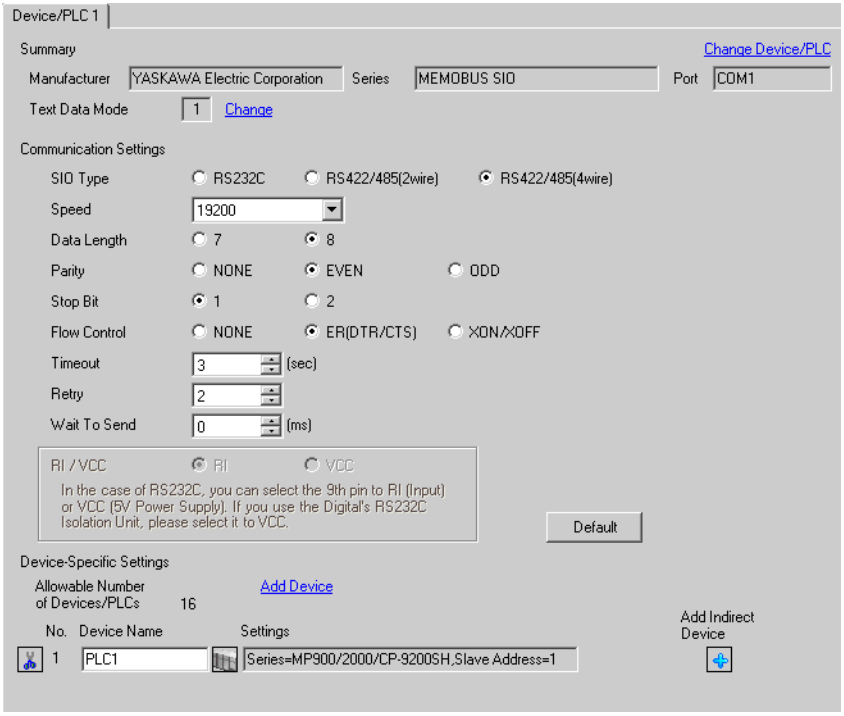

◆ Device Setting

To display the [Individual Device Settings] dialog box, from [Device-Specific Settings] in the [Device/PLC] window, select the external device and click [Settings] .

To connect multiple External Devices, from [Device-Specific Settings] in the [Device/PLC] window, click [Add Device] to add another External Device.

■ Settings of External Device

◆ Ladder Software Setting

1 Right-click [root] in the browser of the ladder software "MPE720" and select [Group Folder] from [New].
2 The [New] dialog box is displayed. Enter the optional group name (ex. "GROUP") and click [OK].
3 The group folder (ex. "GROUP") is created under the [root] in the browser of "MPE720". Right-click the folder and select [Order Folder] from [New].
4 The [New] dialog box is displayed. Enter the optional order name (ex. "ORDER") and click [OK].
5 [ORDER] is created under the [root]-[GROUP] in the browser of "MPE720". Right-click it and select [PLC Type] from [New].
6 The [PLC Type] dialog box is displayed. Enter the optional PLC name (ex. "PLC") and select your External Device for [Device Name], then click [OK].
7 The PLC folder (ex. "PLC") is created under the [root]-[GROUP] in the browser of "MPE720". Double-click [PLC] to display the [CPU Logon] dialog box.
8 Enter "User name" and "Password" optionally in the [CPU Logon] dialog box and click [OK].
9 Multiple folders are created under the [root]-[GROUP]-[PLC] in the browser of "MPE720". Double-click [Definition Folder]-[Module Configuration] to open the [Engineering Manager] window.
10 Select your link unit in [Module] of the same [No.] field as your slot number in [Controller].
11 Double-click the same [No.] field as your slot number to display the setting window.

Setup Items	Setup Description
Transmission Protocol	Memobus
Master/Slave	Slave
Device address	Device address of the External Device
Serial I/F	RS-485
Transmission Mode	RTU
Data Length	8Bit
Parity Bit	even
Stop Bit	1Stop
Baud Rate	19.2K
Send Delay	Not specified
Auto Reception*1	Not specified

*1 When [Auto Reception] is set to [Not specified], the ladder program is required to communicate the Display with the External Device. It is not required in case of [Specified].

◆ Example of Ladder Program

NOTE

- This ladder program example enables to communicate the 1 connecting port with the Display. Note that each connecting port requires the ladder program when you use multiple connecting ports to communicate simultaneously.
- Note that each connector requires the ladder program when you connect the RS232C connector, the RS422 connector on 217IF-01, the RS232C connector on 218IF-01, and the RS232C connector on 218IF-02 simultaneously.
- Use the ladder software to perform the communication settings on the External Device. Those settings are not performed in this ladder program.

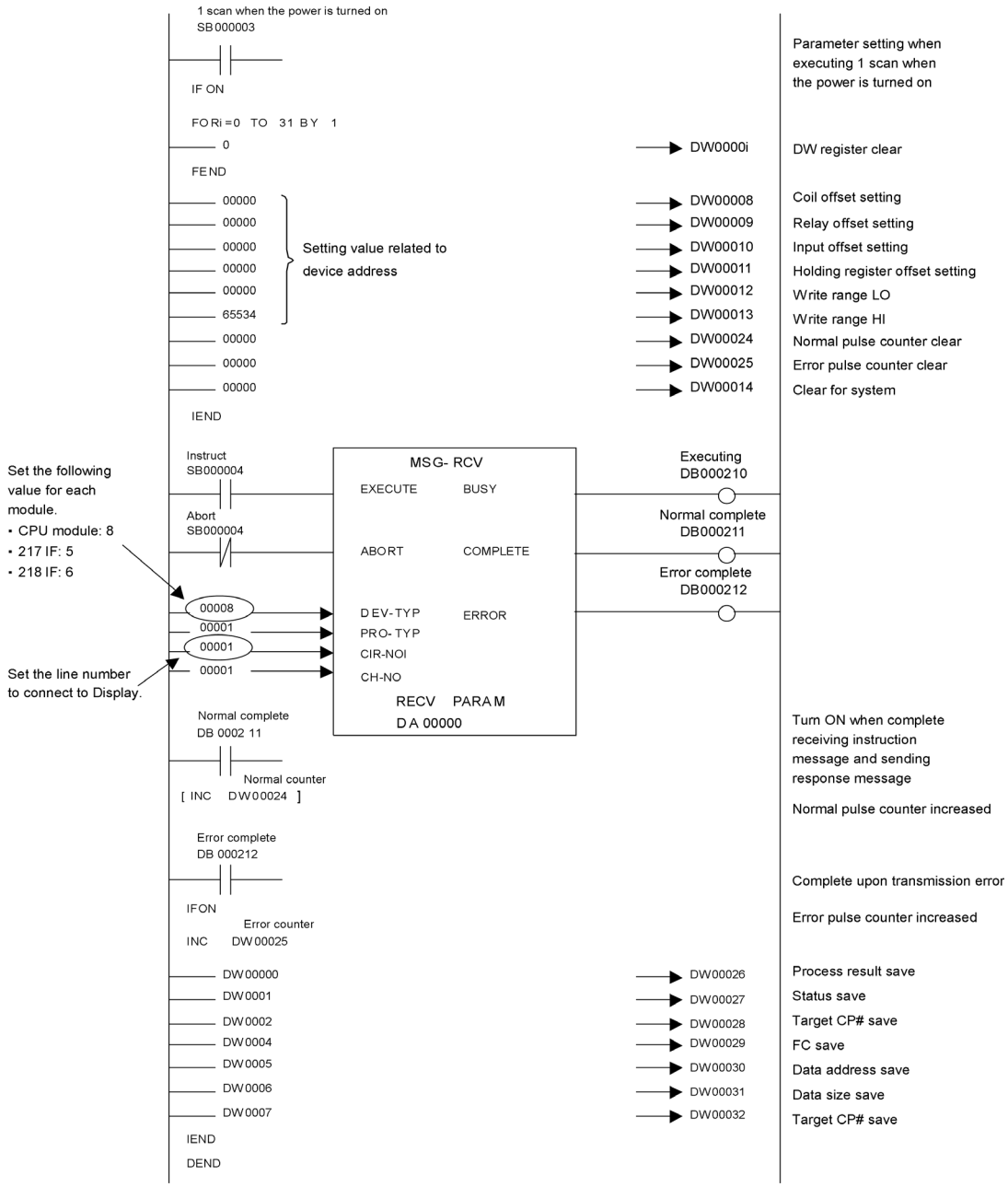

◆ Notes

- Please refer to the manual of the ladder software for more detail on other setting description.

3.8 Setting Example 8

■ Settings of GP-Pro EX

◆ Communication Settings

To display the setup screen, from the [Project] menu, point to [System Settings] and select [Device/PLC].

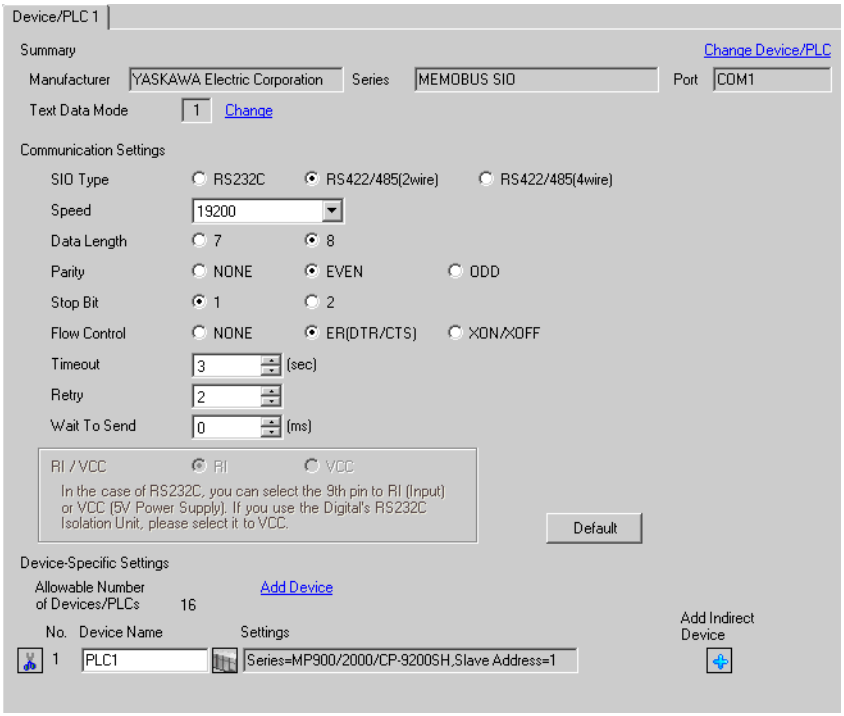

◆ Device Setting

To display the [Individual Device Settings] dialog box, from [Device-Specific Settings] in the [Device/PLC] window, select the external device and click [Settings] .

To connect multiple External Devices, from [Device-Specific Settings] in the [Device/PLC] window, click [Add Device] to add another External Device.

■ Settings of External Device

◆ Ladder Software Setting

1 Right-click [root] in the browser of the ladder software "MPE720" and select [Group Folder] from [New].
2 The [New] dialog box is displayed. Enter the optional group name (ex. "GROUP") and click [OK].
3 The group folder (ex. "GROUP") is created under the [root] in the browser of "MPE720". Right-click the folder and select [Order Folder] from [New].
4 The [New] dialog box is displayed. Enter the optional order name (ex. "ORDER") and click [OK].
5 [ORDER] is created under the [root]-[GROUP] in the browser of "MPE720". Right-click it and select [PLC Type] from [New].
6 The [PLC Type] dialog box is displayed. Enter the optional PLC name (ex. "PLC") and select your External Device for [Device Name], then click [OK].
7 The PLC folder (ex. "PLC") is created under the [root]-[GROUP] in the browser of "MPE720". Double-click [PLC] to display the [CPU Logon] dialog box.
8 Enter "User name" and "Password" optionally in the [CPU Logon] dialog box and click [OK].
9 Multiple folders are created under the [root]-[GROUP]-[PLC] in the browser of "MPE720". Double-click [Definition Folder]-[Module Configuration] to open the [Engineering Manager] window.
10 Select your link unit in [Module] of the same [No.] field as your slot number in [Controller].
11 Double-click the same [No.] field as your slot number to display the setting window.

Setup Items	Setup Description
Transmission Protocol	Memobus
Master/Slave	Slave
Device address	Device address of the External Device
Serial I/F	RS-485
Transmission Mode	RTU
Data Length	8Bit
Parity Bit	even
Stop Bit	1Stop
Baud Rate	19.2K
Send Delay	Not specified
Auto Reception*1	Not specified

*1 When [Auto Reception] is set to [Not specified], the ladder program is required to communicate the Display with the External Device. It is not required in case of [Specified].

◆ Example of Ladder Program

NOTE

- This ladder program example enables to communicate the 1 connecting port with the Display. Note that each connecting port requires the ladder program when you use multiple connecting ports to communicate simultaneously.
- Note that each connector requires the ladder program when you connect the RS232C connector, the RS422 connector on 217IF-01, the RS232C connector on 218IF-01, and the RS232C connector on 218IF-02 simultaneously.
- Use the ladder software to perform the communication settings on the External Device. Those settings are not performed in this ladder program.

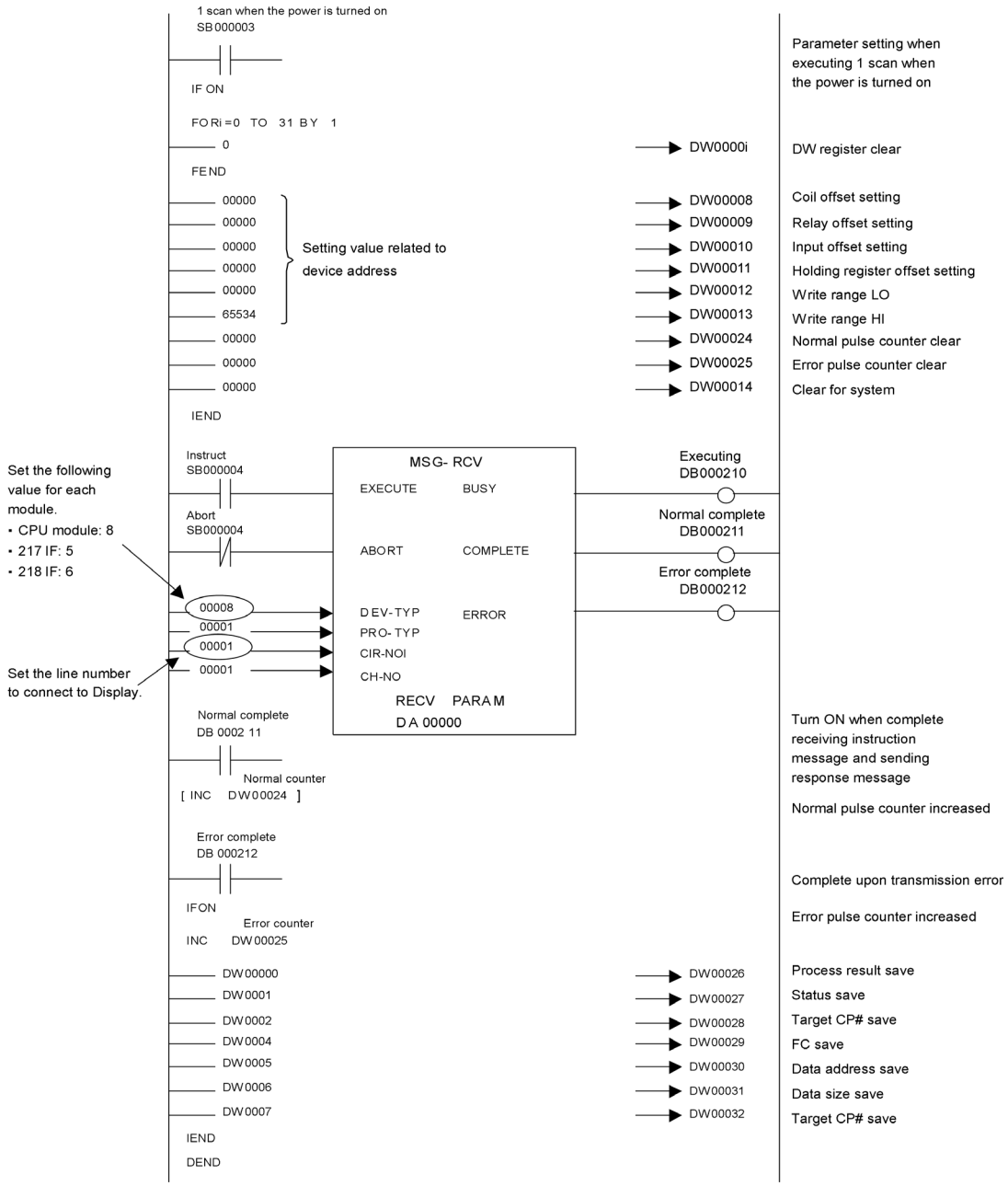

◆ Notes

- Please refer to the manual of the ladder software for more detail on other setting description.

3.9 Setting Example 9

■ Settings of GP-Pro EX

◆ Communication Settings

To display the setup screen, from the [Project] menu, point to [System Settings] and select [Device/PLC].

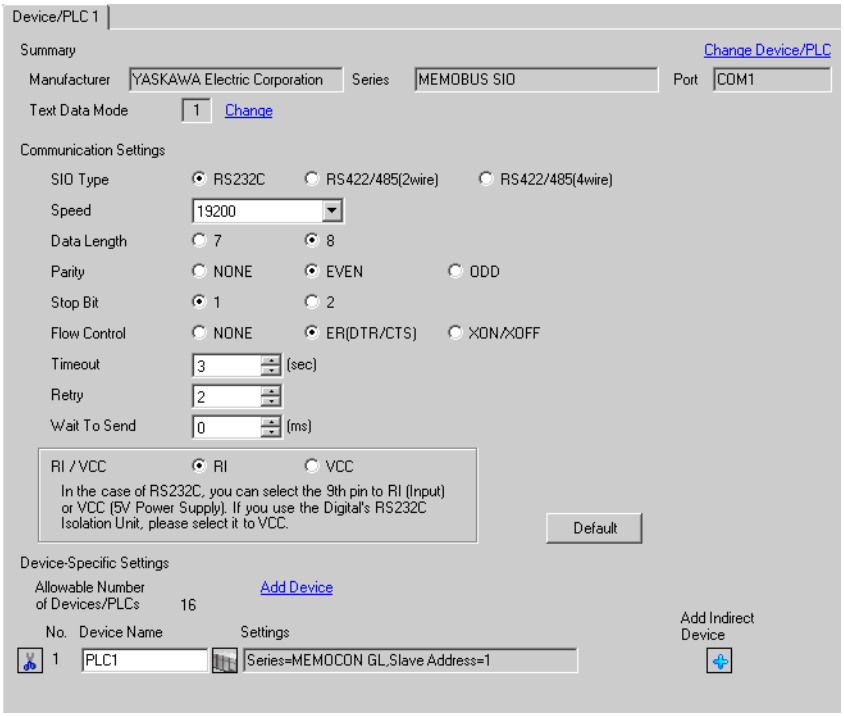

◆ Device Setting

To display the [Individual Device Settings] dialog box, from [Device-Specific Settings] in the [Device/PLC] window, select the external device and click [Settings] .

To connect multiple External Devices, from [Device-Specific Settings] in the [Device/PLC] window, click [Add Device] to add another External Device.

■ Settings of External Device

Use the ladder software (MEMOSOFT for Windows) for communication settings of the External Device.
Please refer to the manual of the External Device for more details.

◆ Procedure

1 Connect the Link I/F to a PC.

2 Start the ladder software and create a new project.
Double click [CPU20] of [System Configuration] in the tree view to display the [CPU Parameter Settings] dialog box.

3 Select the CPU of the connecting External Device from [PC Type].

4 Click the [RS232C Port Setting] tab and perform the communication settings of the External Device.

Setup Items	Setup Description
Mode	RTU
Data Bit	8 (Fixed)
Parity	EVEN
Stop Bit	1
Speed	19200
Address	1
Delay	0

5 Select [Loader], [Project File to PC] from the [Tool] menu and load the communication settings to the External Device.

6 Turn ON the power of the External Device again.

3.10 Setting Example 10

■ Settings of GP-Pro EX

◆ Communication Settings

To display the setup screen, from the [Project] menu, point to [System Settings] and select [Device/PLC].

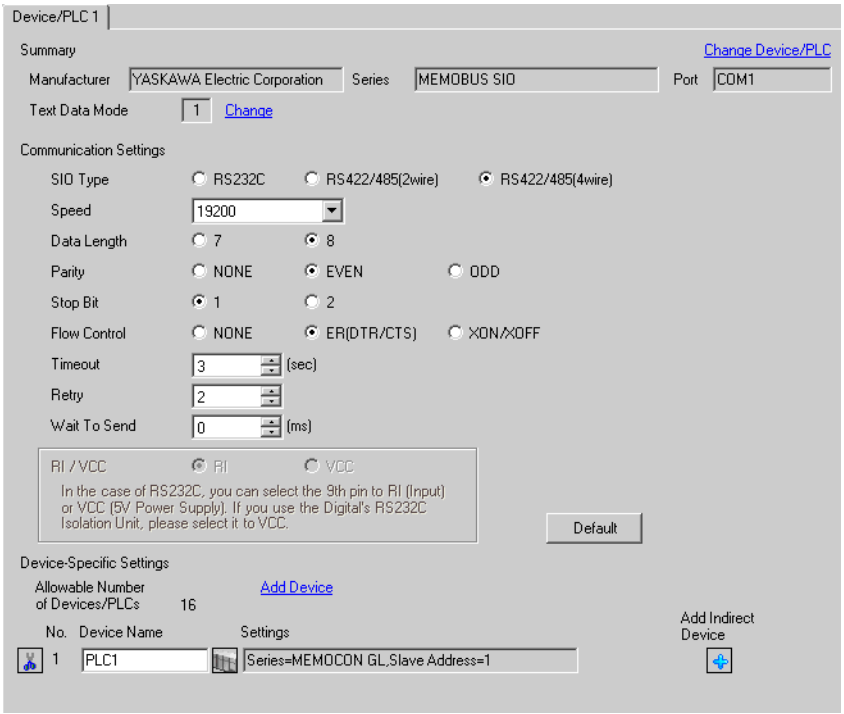

◆ Device Setting

To display the [Individual Device Settings] dialog box, from [Device-Specific Settings] in the [Device/PLC] window, select the external device and click [Settings] .

To connect multiple External Devices, from [Device-Specific Settings] in the [Device/PLC] window, click [Add Device] to add another External Device.

■ Settings of External Device

Use the ladder software (MEMOSOFT for Windows) for communication settings of the External Device. Please refer to the manual of the External Device for more details.

◆ Procedure

1 Connect the Link I/F to a PC.

2 Start the ladder software and create a new project.
Double click [Port Settings] of [System Configuration] in the tree view to display the [COMM. Parameter Settings] dialog box.

3 Perform the communication settings for the COMM. port of the channel to be used.

Setup Items	Setup Description
Mode	RTU
Data Bit	8 (Fixed)
Parity	EVEN
Stop Bit	1
Speed	19200
Address	1
Delay	0

4 Select [Loader], [Project File to PC] from the [Tool] menu and load the communication settings to the External Device.

5 Turn ON the power of the External Device again.

3.11 Setting Example 11

■ Settings of GP-Pro EX

◆ Communication Settings

To display the setup screen, from the [Project] menu, point to [System Settings] and select [Device/PLC].

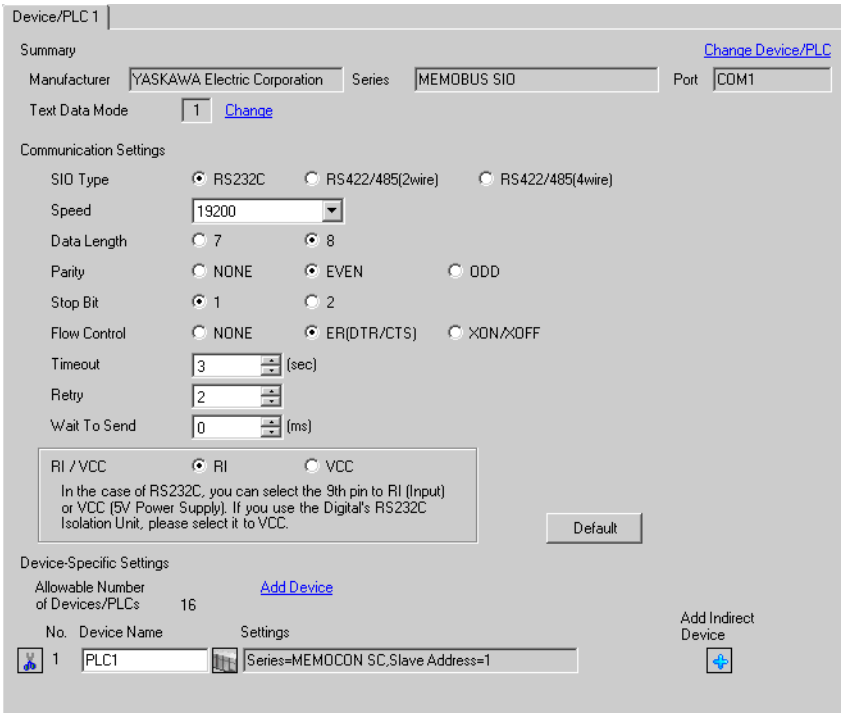

◆ Device Setting

To display the [Individual Device Settings] dialog box, from [Device-Specific Settings] in the [Device/PLC] window, select the external device and click [Settings] .

To connect multiple External Devices, from [Device-Specific Settings] in the [Device/PLC] window, click [Add Device] to add another External Device.

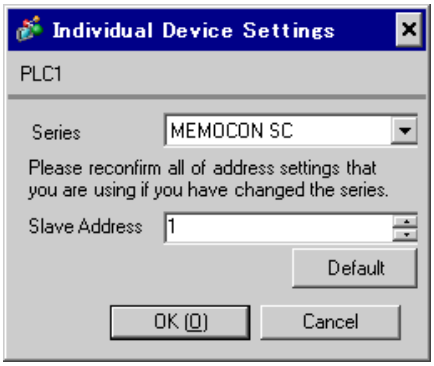

■ Settings of External Device

Use the process computer for communication settings of the External Device.

Please refer to the manual of the External Device for more details.

◆ Procedure

1 Perform the following communication settings in the process computer.

Setup Items	Setup Description
Mode	RTU
Data Bit	8 (Fixed)
Parity Setting	Enable
Parity	EVEN
Stop Bit	1
Speed	19200
Address	1
Delay	0

3.12 Setting Example 12

■ Settings of GP-Pro EX

◆ Communication Settings

To display the setup screen, from the [Project] menu, point to [System Settings] and select [Device/PLC].

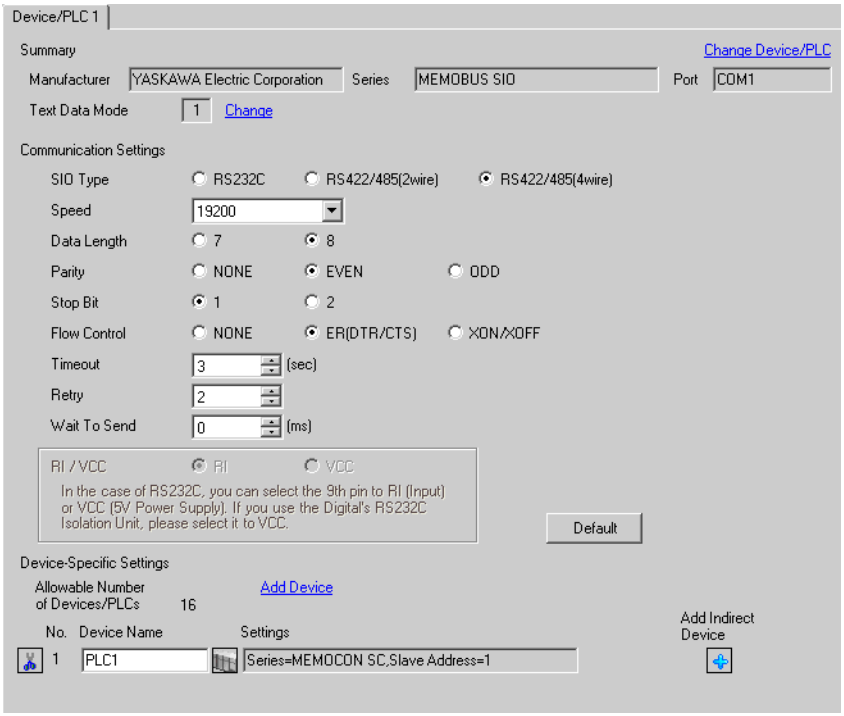

◆ Device Setting

To display the [Individual Device Settings] dialog box, from [Device-Specific Settings] in the [Device/PLC] window, select the external device and click [Settings] .

To connect multiple External Devices, from [Device-Specific Settings] in the [Device/PLC] window, click [Add Device] to add another External Device.

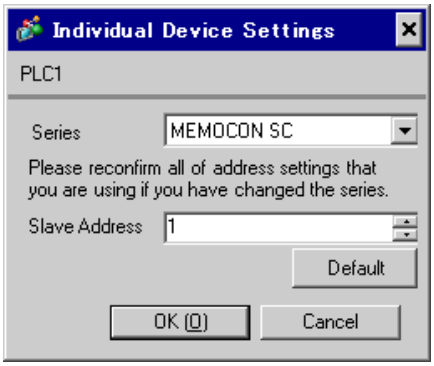

■ Settings of External Device

Use the process computer for communication settings of the External Device.

Please refer to the manual of the External Device for more details.

◆ Procedure

1 Perform the following communication settings in the process computer.

Setup Items	Setup Description
Mode	RTU
Data Bit	8 (Fixed)
Parity Setting	Enable
Parity	EVEN
Stop Bit	1
Speed	19200
Address	1
Delay	0

3.13 Setting Example 13

■ Settings of GP-Pro EX

◆ Communication Settings

To display the setup screen, from the [Project] menu, point to [System Settings] and select [Device/PLC].

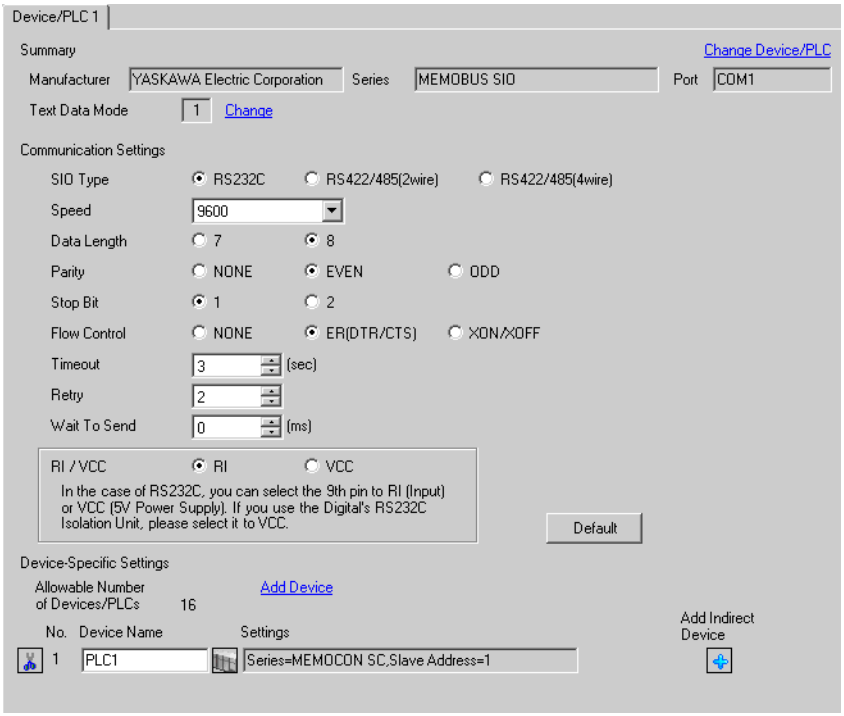

◆ Device Setting

To display the [Individual Device Settings] dialog box, from [Device-Specific Settings] in the [Device/PLC] window, select the external device and click [Settings] .

To connect multiple External Devices, from [Device-Specific Settings] in the [Device/PLC] window, click [Add Device] to add another External Device.

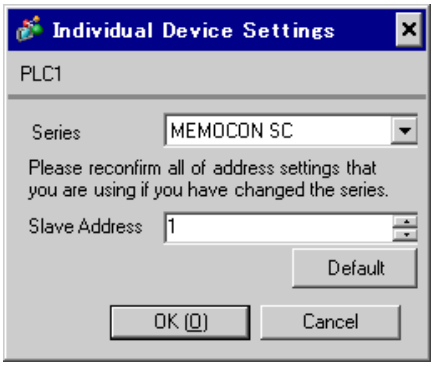

■ Settings of External Device

There is no communication setting on the External Device.

Note that the address should be set using the DIP switch 3 SW of the External Device.

3.14 Setting Example 14

■ Settings of GP-Pro EX

◆ Communication Settings

To display the setup screen, from the [Project] menu, point to [System Settings] and select [Device/PLC].

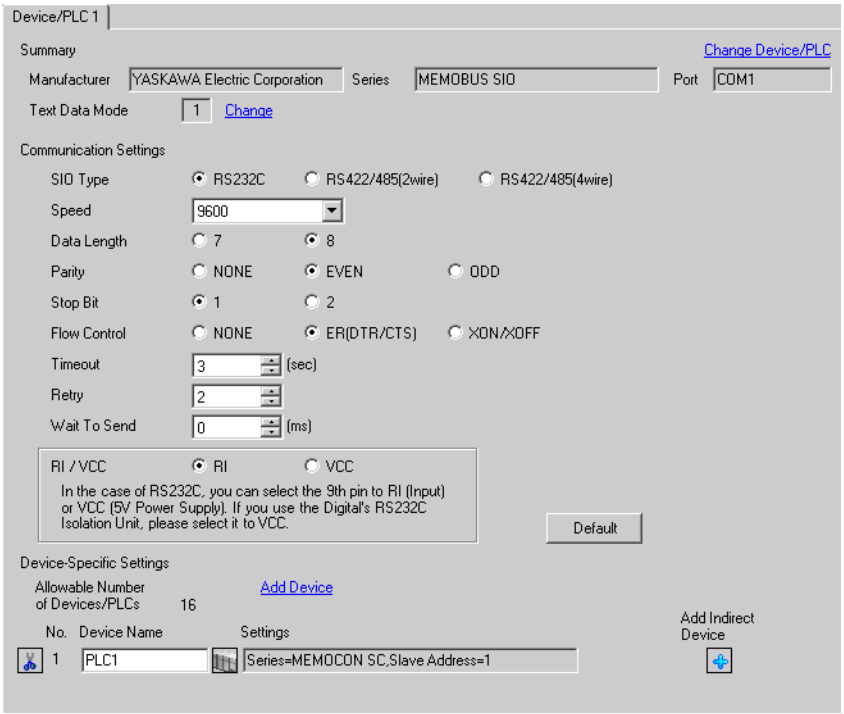

◆ Device Setting

To display the [Individual Device Settings] dialog box, from [Device-Specific Settings] in the [Device/PLC] window, select the external device and click [Settings] .

To connect multiple External Devices, from [Device-Specific Settings] in the [Device/PLC] window, click [Add Device] to add another External Device.

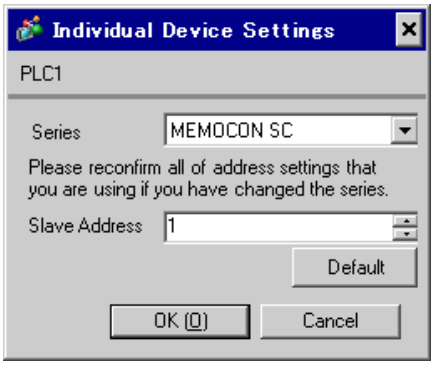

■ Settings of External Device

Use the programming panel for communication settings of the External Device.

Please refer to the manual of the External Device for more details.

◆ Procedure

1 Perform the following communication settings in the programming panel.

Setup Items	Setup Description
Address	1
Baud Rate	9600
Parity Setting	Enable
Parity Type	Even
Stop Bit Length	1
Data Bit Length	8 (RTU mode)
Port Delay Timer	10 ms

4 Setup Items

Set communication settings of the Display with GP-Pro EX or in offline mode of the Display.

The setting of each parameter must be identical to that of External Device.

☞"3 Example of Communication Setting" (page 11)

4.1 Setup Items in GP-Pro EX

■ Communication Settings

To display the setup screen, from the [Project] menu, point to [System Settings] and select [Device/PLC].

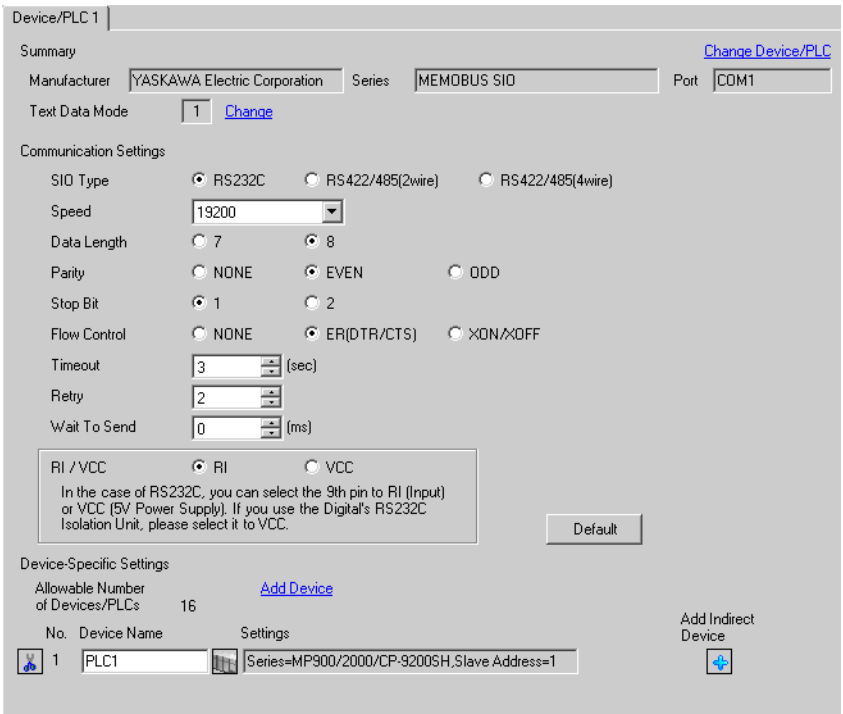

Setup Items	Setup Description
SIO Type	Select the SIO type to communicate with the External Device.
Speed	Select speed between the External Device and the Display.
Data Length	Select data length.
Parity	Select how to check parity.
Stop Bit	Select stop bit length.
Flow Control	Select the communication control method to prevent overflow of transmission and reception data.
Timeout	Use an integer from 1 to 127 to enter the time (s) for which the Display waits for the response from the External Device.
Retry	In case of no response from the External Device, use an integer from 0 to 255 to enter how many times the Display retransmits the command.

Setup Items	Setup Description
Wait To Send	Use an integer from 0 to 255 to enter standby time (ms) for the Display from receiving packets to transmitting next commands.
RI/VCC	You can switch RI/VCC of the 9th pin when you select RS232C for SIO type. It is necessary to change RI/5V by changeover switch of IPC when connect with IPC. Please refer to the manual of the IPC for more detail.

NOTE

- Refer to the GP-Pro EX Reference Manual for Indirect Device.

Cf. GP-Pro EX Reference Manual "Changing the Device/PLC at Runtime (Indirect Device)"

◆ Device Setting

To display the [Individual Device Settings] dialog box, from [Device-Specific Settings] in the [Device/PLC] window, select the external device and click [Settings] .

To connect multiple External Devices, from [Device-Specific Settings] in the [Device/PLC] window, click [Add Device] to add another External Device.

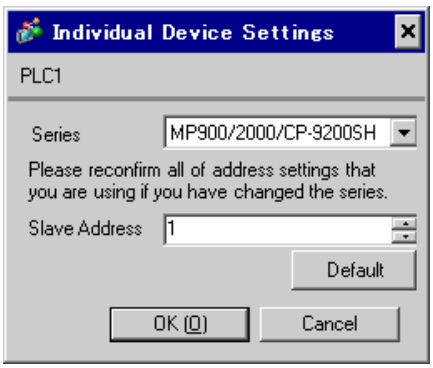

Setup Items	Setup Description
Series	Select the series of the External Device.
Slave Address*1	Enter the slave address of the External Device, using 1 to 247.

*1 Do not set the duplicate unit No. in case of RS422-485 (2wire) or RS422/485 (4wire).

4.2 Setup Items in Offline Mode

NOTE

- Refer to the Maintenance/Troubleshooting guide for information on how to enter offline mode or about the operation.

  Cf. Maintenance/Troubleshooting Guide "Offline Mode"

- The number of the setup items to be displayed for 1 page in the offline mode depends on the Display in use. Please refer to the Reference manual for details.

◆ Communication Settings

To display the setting screen, touch [Device/PLC Settings] from [Peripheral Settings] in offline mode. Touch the External Device you want to set from the displayed list.

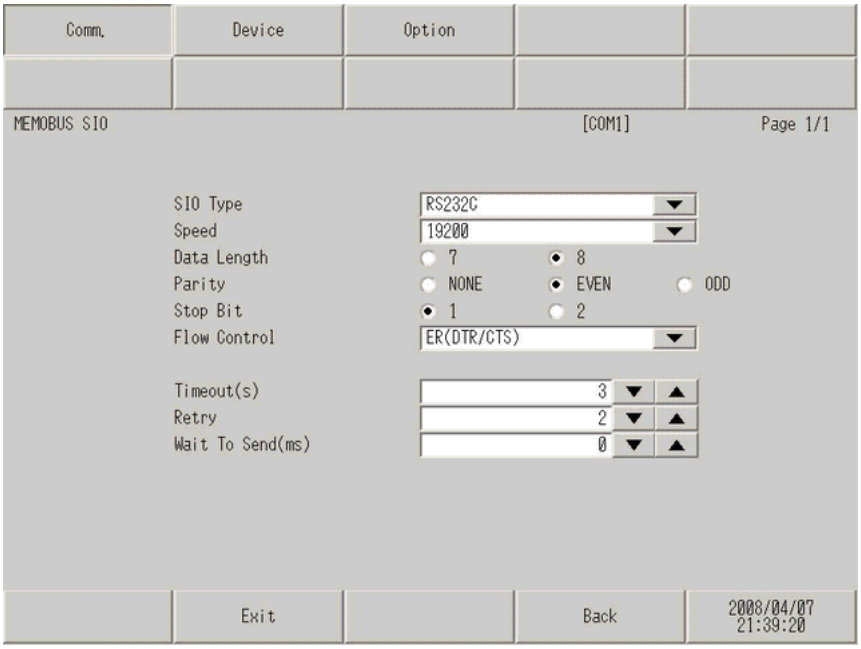

Setup Items	Setup Description
SIO Type	Select the SIO type to communicate with the External Device. **IMPORTANT** To make the communication settings correctly, confirm the serial interface specifications of Display unit for [SIO Type]. We cannot guarantee the operation if a communication type that the serial interface does not support is specified. For details concerning the serial interface specifications, refer to the manual for Display unit.
Speed	Select speed between the External Device and the Display.
Data Length	Select data length.
Parity	Select how to check parity.
Stop Bit	Select stop bit length.
Flow Control	Select the communication control method to prevent overflow of transmission and reception data.

Setup Items	Setup Description
Timeout (s)	Use an integer from 1 to 127 to enter the time (s) for which the Display waits for the response from the External Device.
Retry	In case of no response from the External Device, use an integer from 0 to 255 to enter how many times the Display retransmits the command.
Wait To Send (ms)	Use an integer from 0 to 255 to enter standby time (ms) for the Display from receiving packets to transmitting next commands.

◆ Device Setting

To display the setting screen, touch [Device/PLC Settings] from [Peripheral Settings]. Touch the External Device you want to set from the displayed list, and touch [Device Settings].

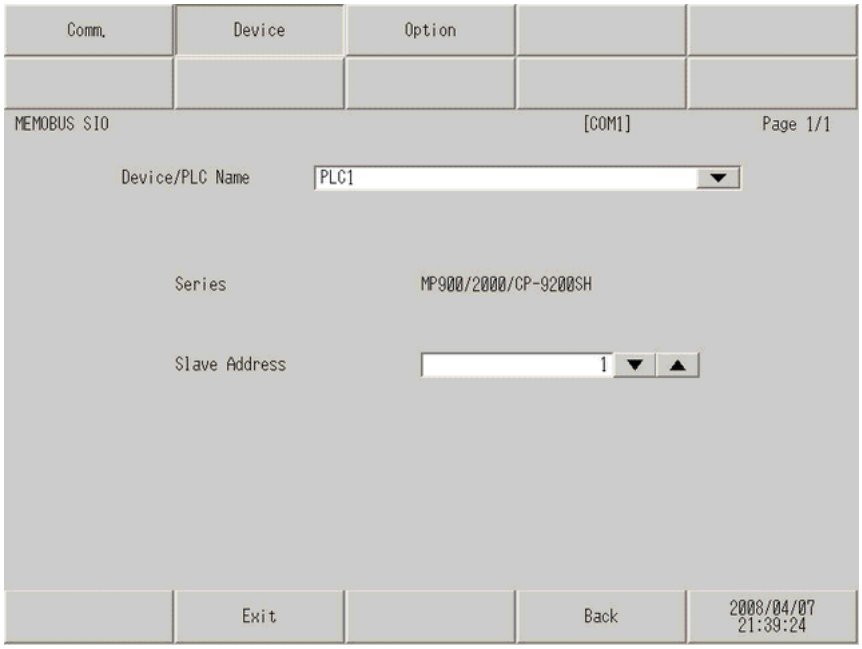

Setup Items	Setup Description
Device/PLC Name	Select the External Device to set. Device name is a title of the External Device set with GP-Pro EX. (Initial value [PLC1])
Series	Displays the series of the External Device.
Slave Address *1	Enter the slave address of the External Device, using 1 to 247.

*1 Do not set the duplicate unit No. in case of RS422-485 (2wire) or RS422/485 (4wire).

◆ Option

To display the setting screen, touch [Device/PLC Settings] from [Peripheral Settings]. Touch the External Device you want to set from the displayed list, and touch [Option].

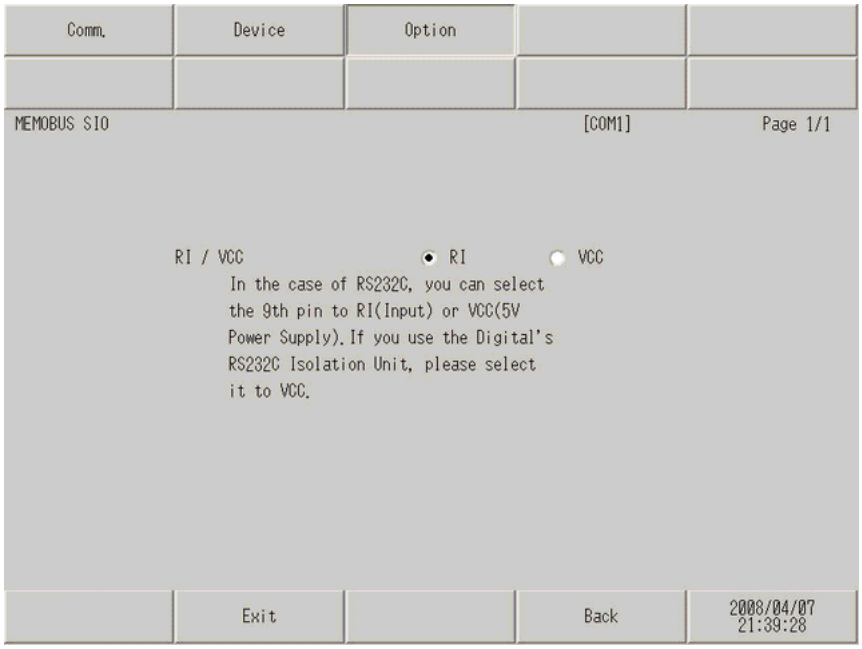

Setup Items	Setup Description
RI/VCC	You can switch RI/VCC of the 9th pin when you select RS232C for SIO type. It is necessary to change RI/5V by changeover switch of IPC when connect with IPC. Please refer to the manual of the IPC for more detail.

NOTE

- GP-4100 series, GP-4*01TM, GP-Rear Module, LT-4*01TM and LT-Rear Module do not have the [Option] setting in the offline mode.

5 Cable Diagram

The following cable diagrams may be different from cable diagrams recommended by External Device Manufacturer.

Please be assured there is no operational problem in applying the cable diagram shown in this manual.

- The FG pin of the External Device body must be grounded according to your country's applicable standard. Refer to your External Device manual for details.
- SG and FG are connected inside the Display. When connecting the External Device to SG, design your system to avoid short-circuit loops.
- Connect an isolation unit if the communication is not stable due to noise or other factors.

5.1 Cable Diagram 1

Display (Connection Port)	Cable		Remarks
GP3000 (COM1) GP4000*1 (COM1) SP5000*2 (COM1/2) SP-5B00 (COM1) ST3000 (COM1) ST6000 (COM1) STM6000 (COM1) STC6000 (COM1) ET6000 (COM1) LT3000 (COM1) IPC*3 PC/AT	1A	User-created cable	The cable length must be 15m or less.
GP-4105 (COM1) GP-4115T (COM1) GP-4115T3 (COM1)	1B	User-created cable	The cable length must be 15m or less.
LT-4*01TM (COM1) LT-Rear Module (COM1)	1C	RJ45 RS-232C Cable (5m) by Pro-face PFXZLMCBRJR21	The cable length must be 5m or less.

*1 All GP4000 models except GP-4100 series and GP-4203T

*2 Except SP-5B00

*3 Only the COM port which can communicate by RS-232C can be used.

■ IPC COM Port (page 7)

1A)

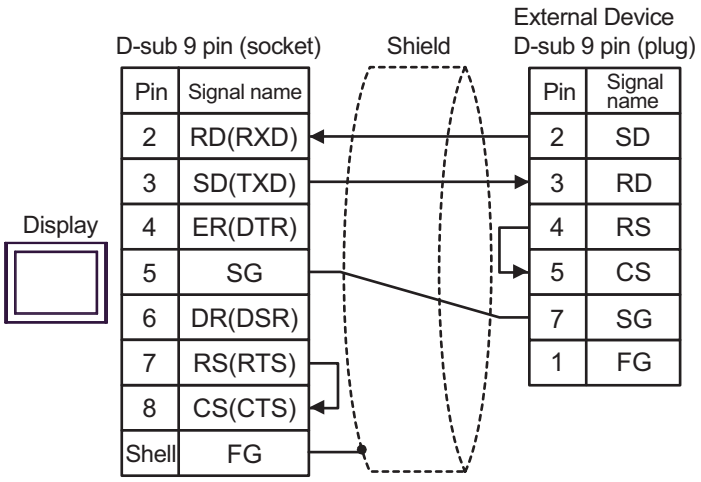

NOTE

- The cable length must be 15m or less.

1B)

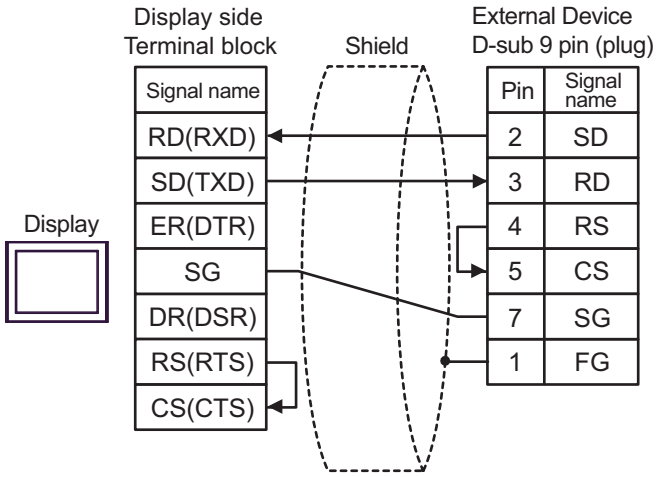

NOTE

- The cable length must be 15m or less.

1C)

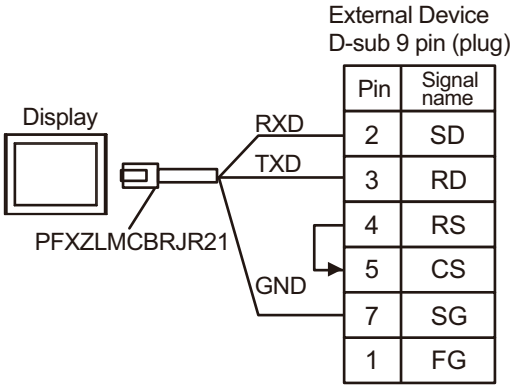

NOTE

- The cable length must be 5m or less.

5.2 Cable Diagram 2

Display (Connection Port)	Cable		Remarks
GP3000 (COM1) GP4000*1 (COM1) SP5000*2 (COM1/2) SP-5B00 (COM1) ST3000 (COM1) ST6000 (COM1) STM6000 (COM1) STC6000 (COM1) ET6000 (COM1) LT3000 (COM1) IPC*3 PC/AT	2A	User-created cable	The cable length must be 15m or less.
GP-4105 (COM1) GP-4115T (COM1) GP-4115T3 (COM1)	2B	User-created cable	The cable length must be 15m or less.

*1 All GP4000 models except GP-4100 series and GP-4203T

*2 Except SP-5B00

*3 Only the COM port which can communicate by RS-232C can be used.

■ IPC COM Port (page 7)

2A)

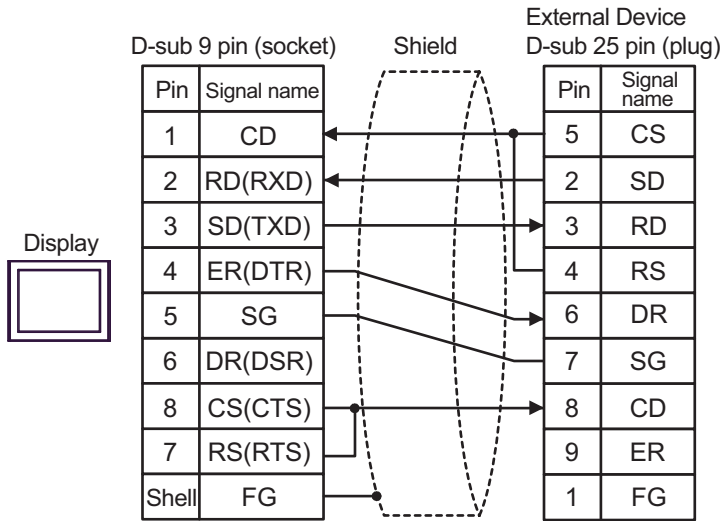

NOTE

- The cable length must be 15m or less.

2B)

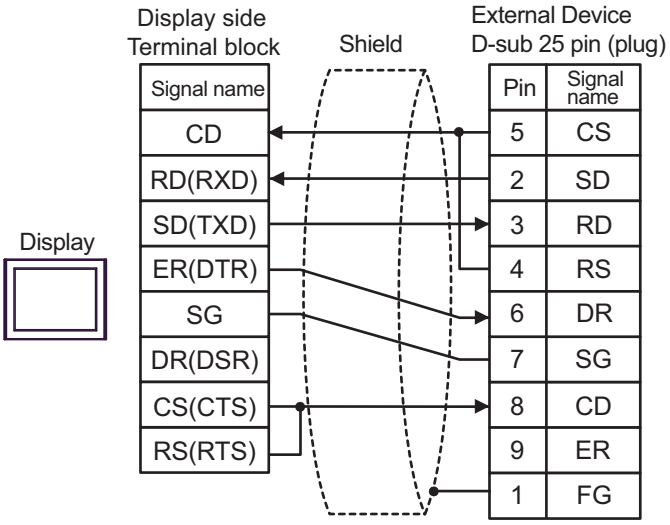

NOTE

- The cable length must be 15m or less.

5.3 Cable Diagram 3

Display (Connection Port)	Cable		Remarks
GP3000[*1] (COM1) AGP-3302B (COM2) GP-4*01TM (COM1) GP-Rear Module (COM1) ST3000[*2] (COM2) LT3000 (COM1) IPC[*3]	3A	COM Port Conversion Adapter by Pro-face CA3-ADPCOM-01 + Terminal Block Conversion Adapter by Pro-face CA3-ADPTRM-01 + User-created cable	The cable length must be 300m or less.
	3B	User-created cable	
GP3000[*4] (COM2)	3C	Online adapter by Pro-face CA4-ADPONL-01 + Terminal block conversion adapter by Pro-face CA3-ADPTRM-01 + User-created cable	The cable length must be 300m or less.
	3D	Online adapter by Pro-face CA4-ADPONL-01 + User-created cable	
GP-4106 (COM1) GP-4116T (COM1)	3E	User-created cable	The cable length must be 300m or less.
GP4000[*5] (COM2) GP-4201T (COM1) SP5000[*6] (COM1/2) SP-5B00 (COM2) ST6000[*7] (COM2) ST-6200 (COM1) STM6000 (COM1) STC6000 (COM1) ET6000[*8] (COM2) PS6000 (Basic Box) (COM1/2)	3F	RS-422 Terminal Block Conversion Adapter by Pro-face PFXZCBADTM1 [*9] + User-created cable	The cable length must be 300m or less.
	3B	User-created cable	
PE-4000B[*10] PS5000[*9] PS6000 (Optional Interface)[*9]	3G	User-created cable	The cable length must be 300m or less.

*1 All GP3000 models except AGP-3302B

*2 Except AST-3211A and AST-3302B

*3 Only the COM port which can communicate by RS-422/485 (4 wire) can be used. (Except PE-4000B, PS5000, and PS6000)

■ IPC COM Port (page 7)

*4 All GP3000 models except GP-3200 series and AGP-3302B

*5 All GP4000 models except GP-4100 series, GP-4*01TM, GP-Rear Module, GP-4201T and GP-4*03T

*6 Except SP-5B00

*7 Except ST-6200

*8 Due to the COM port specifications, flow control is not possible. Omit wiring the control pins on the Display side of the cable diagram.

*9 When using a Terminal Block Conversion Adapter (CA3-ADPTRM-01) instead of the RS-422 Terminal Block Conversion Adapter, refer to Cable Diagram 3A.

*10 Only the COM port which can communicate by RS-422/485 (4 wire) can be used.

■ IPC COM Port (page 7)

3A)

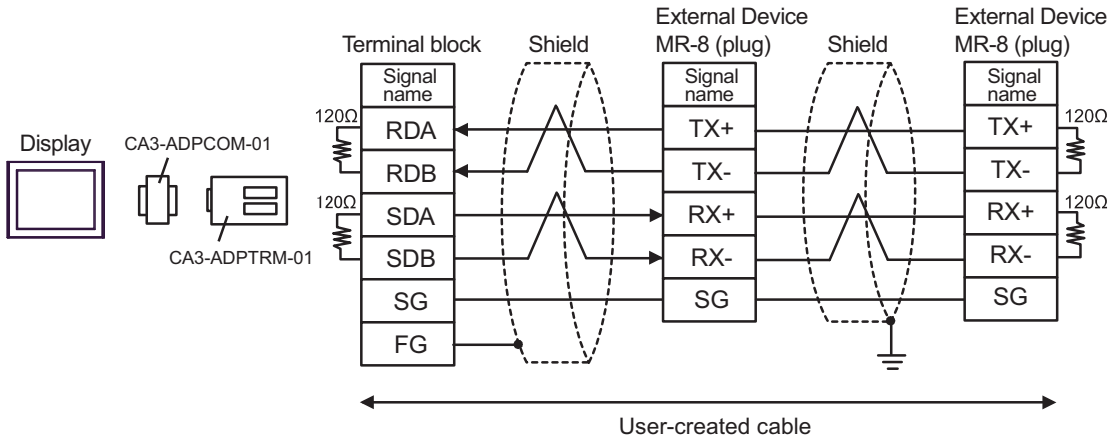

NOTE

- When the External Device has the SG terminal, connect it to the SG terminal of the Display.
- The cable length must be 300m or less.

3B)

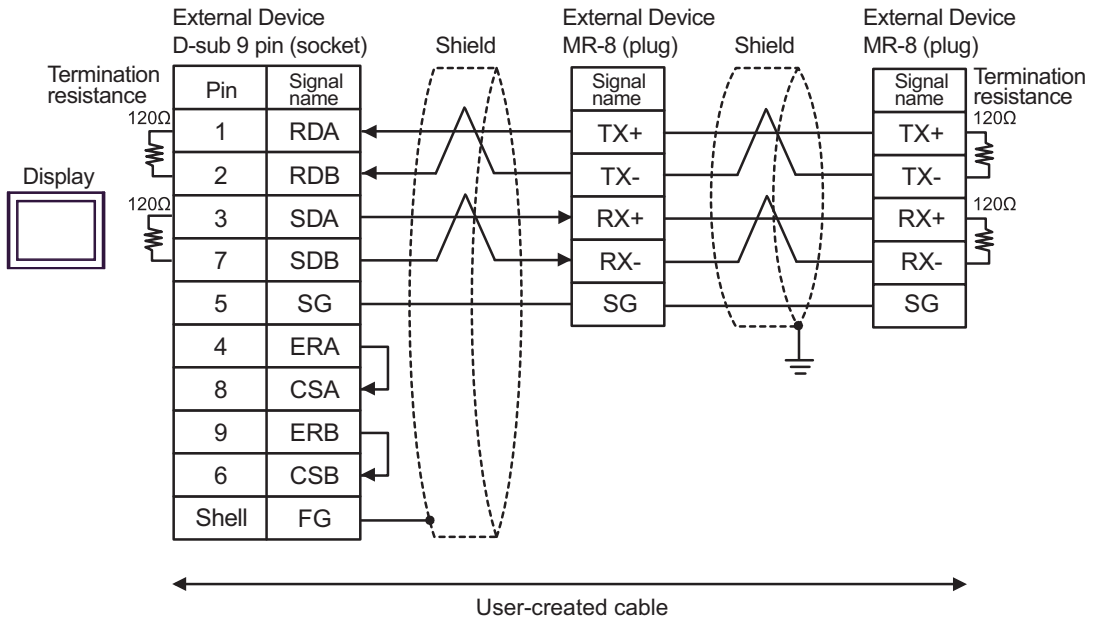

NOTE

- When the External Device has the SG terminal, connect it to the SG terminal of the Display.
- The cable length must be 300m or less.

3C)

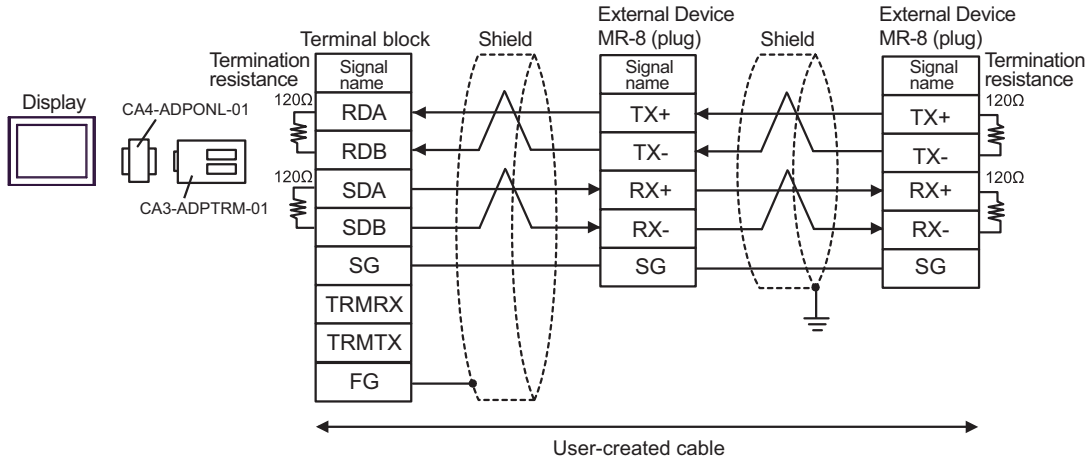

NOTE

- When the External device has the SG terminal, connect it to the SG terminal of the Display.
- The cable length must be 300m or less.

3D)

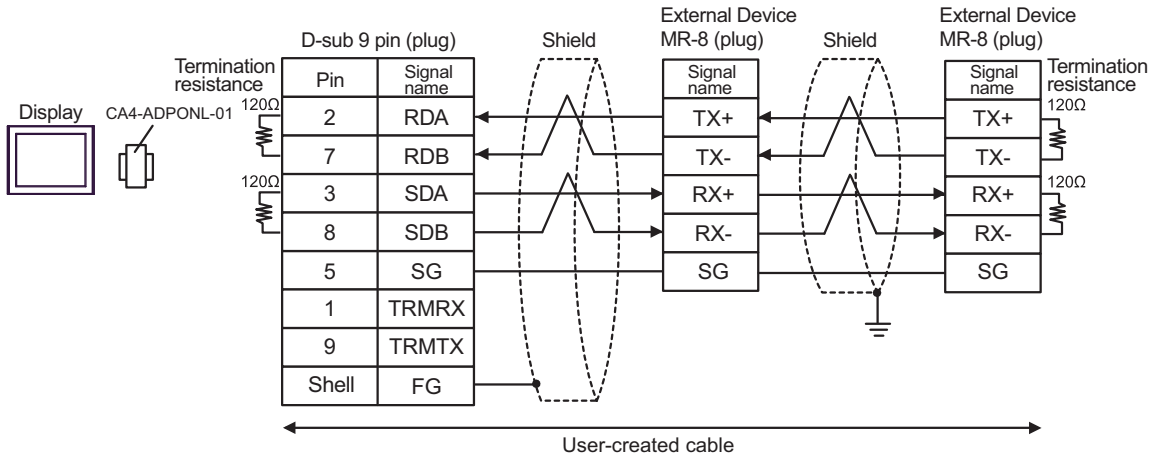

NOTE

- The cable length must be 300m or less.

3E)

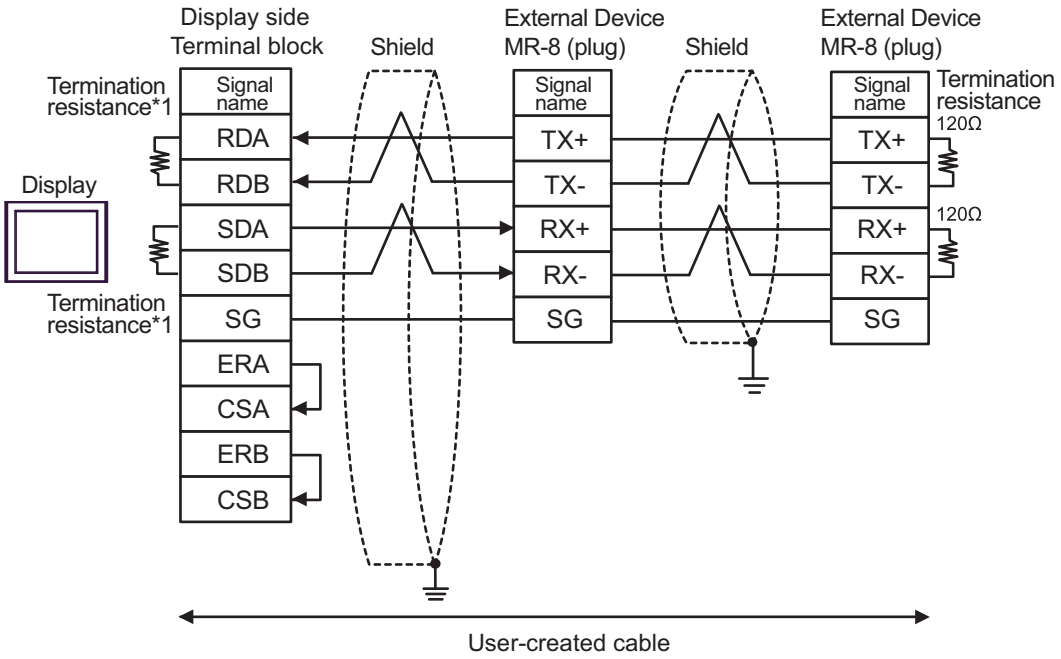

NOTE

- When the External device has the SG terminal, connect it to the SG terminal of the Display.
- The cable length must be 300m or less.

*1 The resistance in the Display is used as the termination resistance. Set the value of the DIP Switch on the rear of the Display as shown in the table below.

DIP Switch No.	Set Value
1	ON
2	ON
3	ON
4	ON

3F)

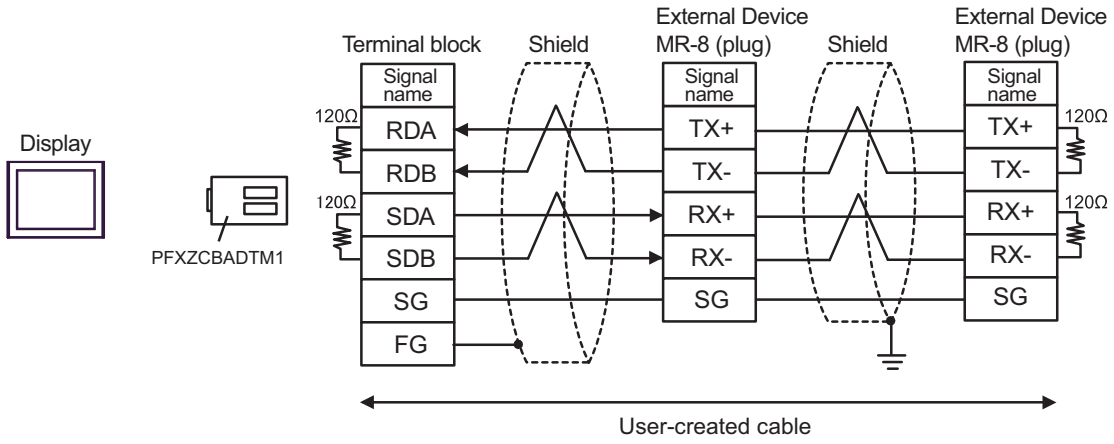

NOTE

- When the External Device has the SG terminal, connect it to the SG terminal of the Display.
- The cable length must be 300m or less.

3G)

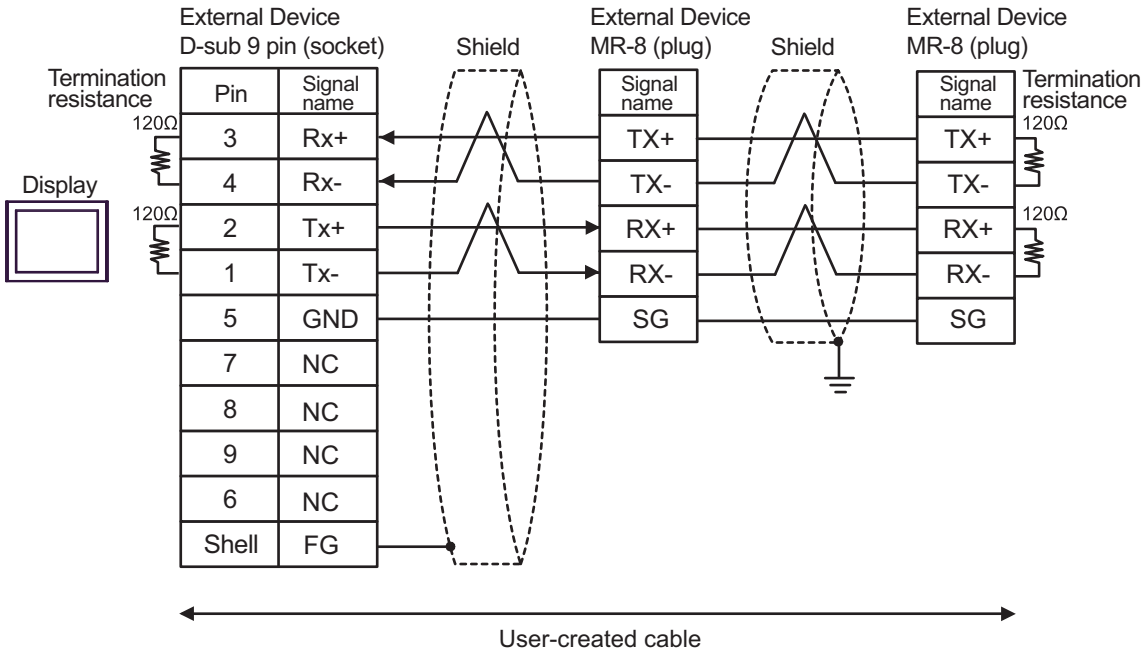

NOTE

- When the External Device has the SG terminal, connect it to the SG terminal of the Display.
- The cable length must be 300m or less.

5.4 Cable Diagram 4

Display (Connection Port)	Cable		Remarks
GP3000[*1] (COM1) AGP-3302B (COM2) GP-4*01TM (COM1) GP-Rear Module (COM1) ST3000[*2] (COM2) LT3000 (COM1) IPC[*3]	4A	COM Port Conversion Adapter by Pro-face CA3-ADPCOM-01 + Terminal Block Conversion Adapter by Pro-face CA3-ADPTRM-01 + User-created cable	The cable length must be 300m or less.
	4B	User-created cable	
GP3000[*4] (COM2)	4C	Online adapter by Pro-face CA4-ADPONL-01 + Terminal block conversion adapter by Pro-face CA3-ADPTRM-01 + User-created cable	The cable length must be 300m or less.
	4D	Online adapter by Pro-face CA4-ADPONL-01 + User-created cable	
GP-4106 (COM1) GP-4116T (COM1)	4E	User-created cable	The cable length must be 300m or less.
GP4000[*5] (COM2) GP-4201T (COM1) SP5000[*6] (COM1/2) SP-5B00 (COM2) ST6000[*7] (COM2) ST-6200 (COM1) STM6000 (COM1) STC6000 (COM1) ET6000[*8] (COM2) PS6000 (Basic Box) (COM1/2)	4F	RS-422 Terminal Block Conversion Adapter by Pro-face PFXZCBADTM1 [*9] + User-created cable	The cable length must be 300m or less.
	4B	User-created cable	
PE-4000B[*10] PS5000[*9] PS6000 (Optional Interface)[*9]	4G	User-created cable	The cable length must be 300m or less.

*1 All GP3000 models except AGP-3302B

*2 Except AST-3211A and AST-3302B

*3 Only the COM port which can communicate by RS-422/485 (4 wire) can be used. (Except PE-4000B, PS5000, and PS6000)

■ IPC COM Port (page 7)

*4 All GP3000 models except GP-3200 series and AGP-3302B

*5 All GP4000 models except GP-4100 series, GP-4*01TM, GP-Rear Module, GP-4201T and GP-4*03T

*6 Except SP-5B00

*7 Except ST-6200

*8 Due to the COM port specifications, flow control is not possible. Omit wiring the control pins on the Display side of the cable diagram.

*9 When using a Terminal Block Conversion Adapter (CA3-ADPTRM-01) instead of the RS-422 Terminal Block Conversion Adapter, refer to Cable Diagram 4A.

*10 Only the COM port which can communicate by RS-422/485 (4 wire) can be used.

■ IPC COM Port (page 7)

4A)

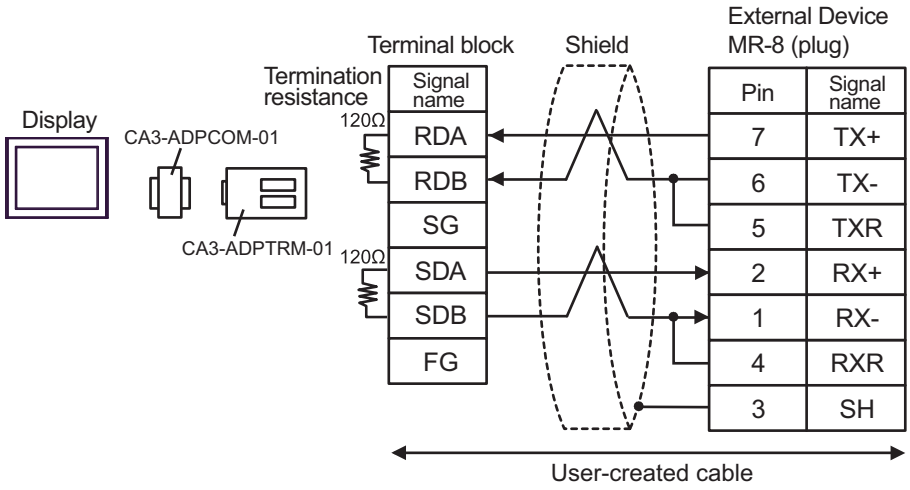

NOTE • The cable length must be 300m or less.

4B)

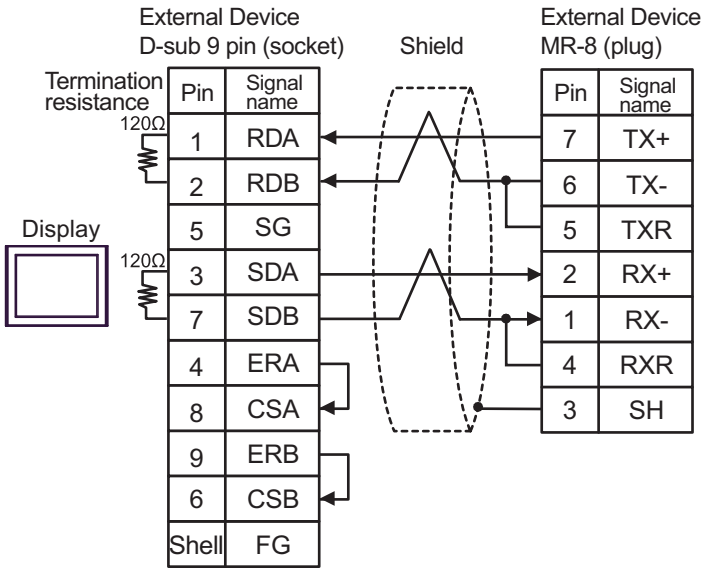

NOTE • The cable length must be 300m or less.

4C)

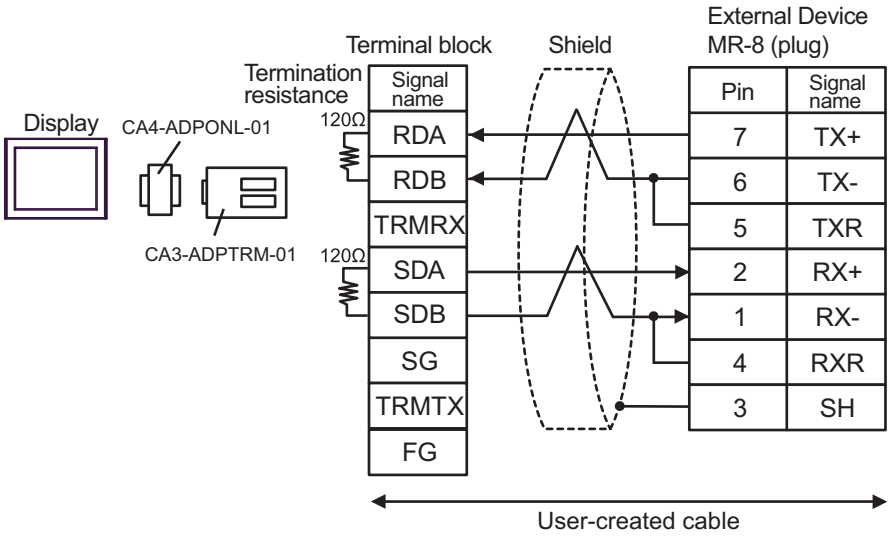

NOTE
- The cable length must be 300m or less.

4D)

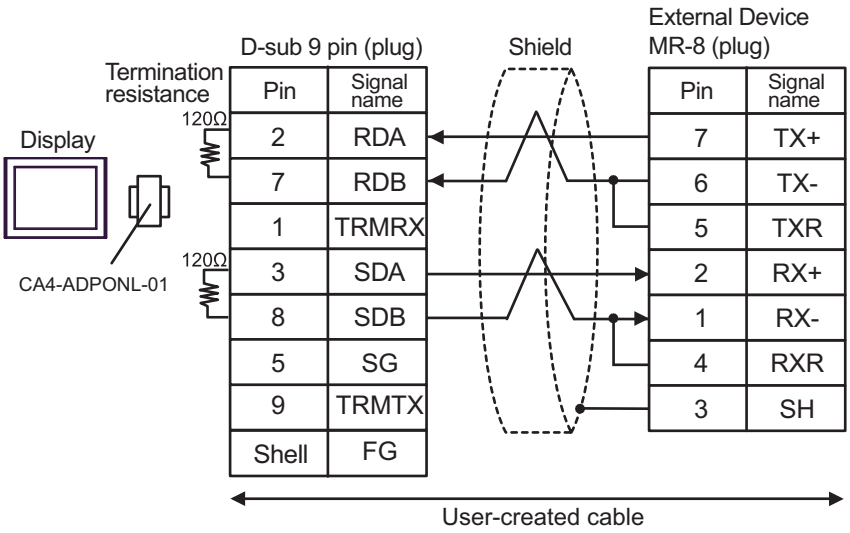

NOTE
- The cable length must be 300m or less.

4E)

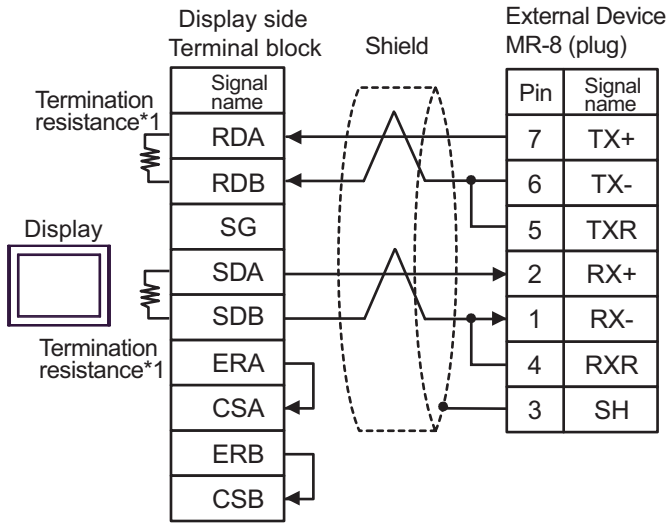

*1 The resistance in the Display is used as the termination resistance. Set the value of the DIP Switch on the rear of the Display as shown in the table below.

DIP Switch No.	Set Value
1	ON
2	ON
3	ON
4	ON

NOTE
- The cable length must be 300m or less.

4F)

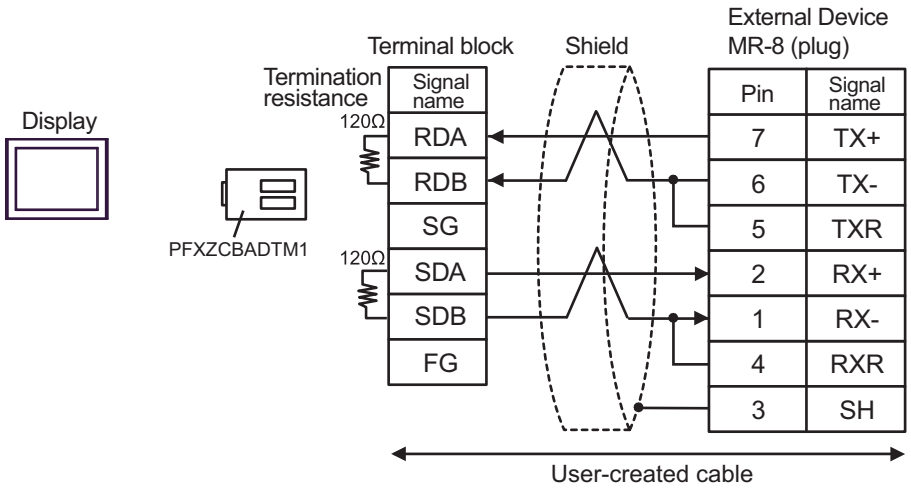

NOTE

- The cable length must be 300m or less.

4G)

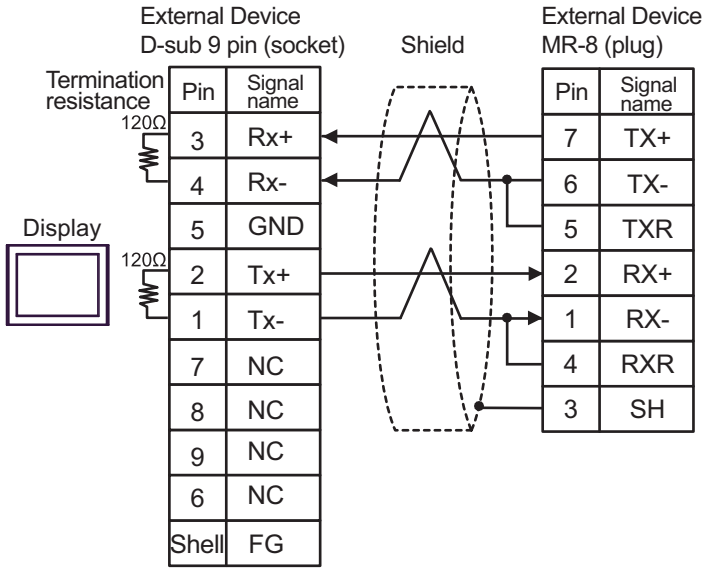

NOTE

- The cable length must be 300m or less.

5.5 Cable Diagram 5

Display (Connection Port)	Cable		Remarks
GP3000[*1] (COM1) AGP-3302B (COM2) GP-4*01TM (COM1) GP-Rear Module (COM1) ST3000[*2] (COM2) LT3000 (COM1)	5A	COM Port Conversion Adapter by Pro-face CA3-ADPCOM-01 + Terminal Block Conversion Adapter by Pro-face CA3-ADPTRM-01 + User-created cable	The cable length must be 300m or less.
	5B	User-created cable	
GP3000[*3] (COM2)	5C	Online adapter by Pro-face (CA4-ADPONL-01) + Terminal block conversion adapter by Pro-face CA3-ADPTRM-01 + User-created cable	The cable length must be 300m or less.
	5D	Online adapter by Pro-face (CA4-ADPONL-01) + User-created cable	
IPC[*4]	5E	Terminal block conversion adapter by Pro-face CA3-ADPTRM-01 + COM port conversion adapter by Pro-face CA3-ADPCOM-01 + User-created cable	The cable length must be 300m or less.
	5F	User-created cable	
GP-4106 (COM1) GP-4116T (COM1)	5G	User-created cable	The cable length must be 300m or less.
GP-4107 (COM1) GP-4*03T[*5] (COM2) GP-4203T (COM1)	5H	User-created cable	The cable length must be 300m or less.
GP4000[*6] (COM2) GP-4201T (COM1) SP5000[*7] (COM1/2) SP-5B00 (COM2) ST6000[*8] (COM2) ST-6200 (COM1) STM6000 (COM1) STC6000 (COM1) ET6000[*9] (COM2) PS6000 (Basic Box) (COM1/2)	5I	RS-422 Terminal Block Conversion Adapter by Pro-face PFXZCBADTM1 [*10] + User-created cable	The cable length must be 300m or less.
	5B	User-created cable	
LT-4*01TM (COM1) LT-Rear Module (COM1)	5J	RJ45 RS-485 Cable (5m) by Pro-face PFXZLMCBRJR81	The cable length must be 200m or less.

Display (Connection Port)	Cable		Remarks
PE-4000B*11 PS5000*10 PS6000 (Optional Interface)*10	5K	User-created cable	The cable length must be 300m or less.

*1 All GP3000 models except AGP-3302B

*2 Except AST-3211A and AST-3302B

*3 All GP3000 models except GP-3200 series and AGP-3302B

*4 Only the COM port which can communicate by RS-422/485 (2 wire) can be used. (Except PE-4000B, PS5000, and PS6000)

■ IPC COM Port (page 7)

*5 Except GP-4203T

*6 All GP4000 models except GP-4100 series, GP-4*01TM, GP-Rear Module, GP-4201T and GP-4*03T

*7 Except SP-5B00

*8 Except ST-6200

*9 Due to the COM port specifications, flow control is not possible. Omit wiring the control pins on the Display side of the cable diagram.

*10 When using a Terminal Block Conversion Adapter (CA3-ADPTRM-01) instead of the RS-422 Terminal Block Conversion Adapter, refer to Cable Diagram 5A.

*11 Only the COM port which can communicate by RS-422/485 (2 wire) can be used.

■ IPC COM Port (page 7)

5A)

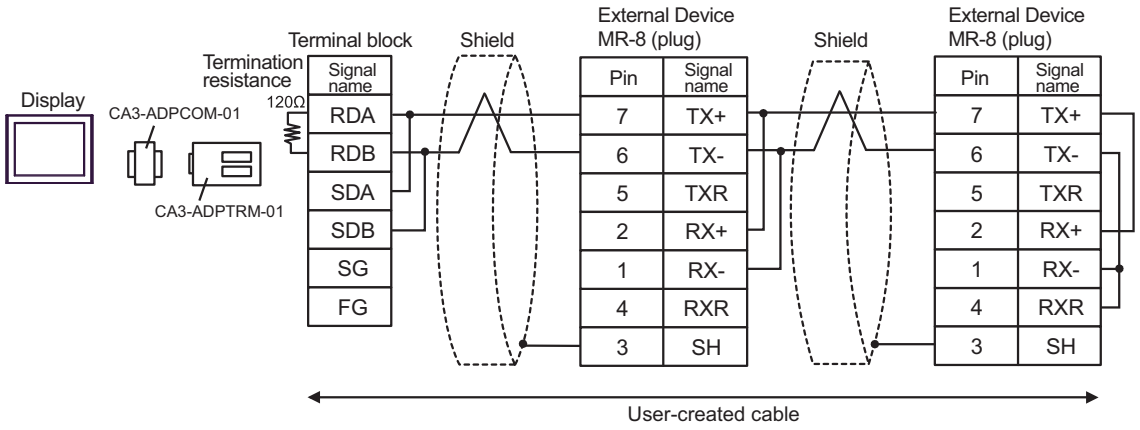

NOTE
- The cable length must be 300m or less.

5B)

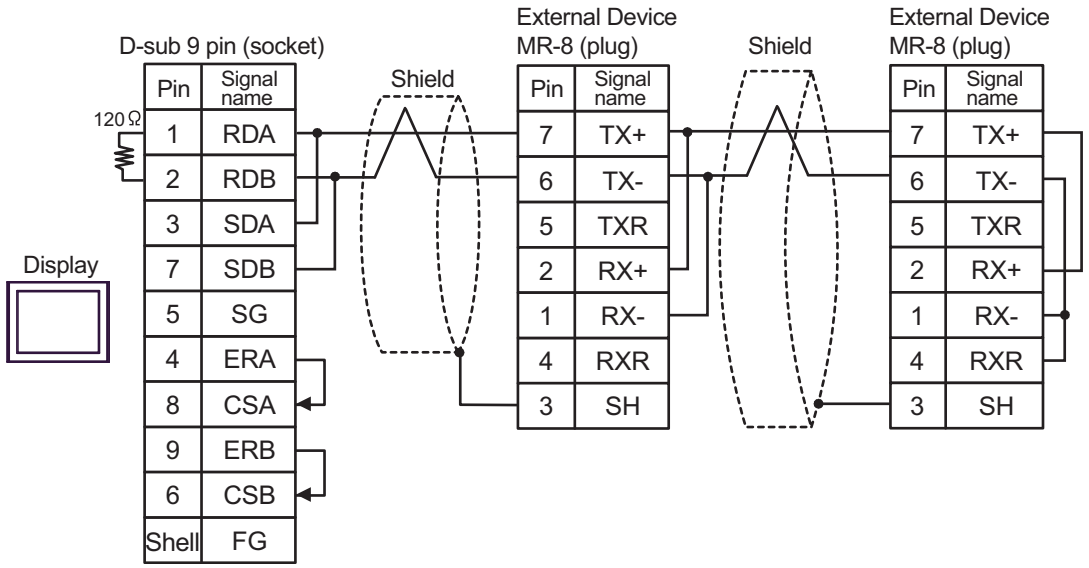

NOTE
- The cable length must be 300m or less.

5C)

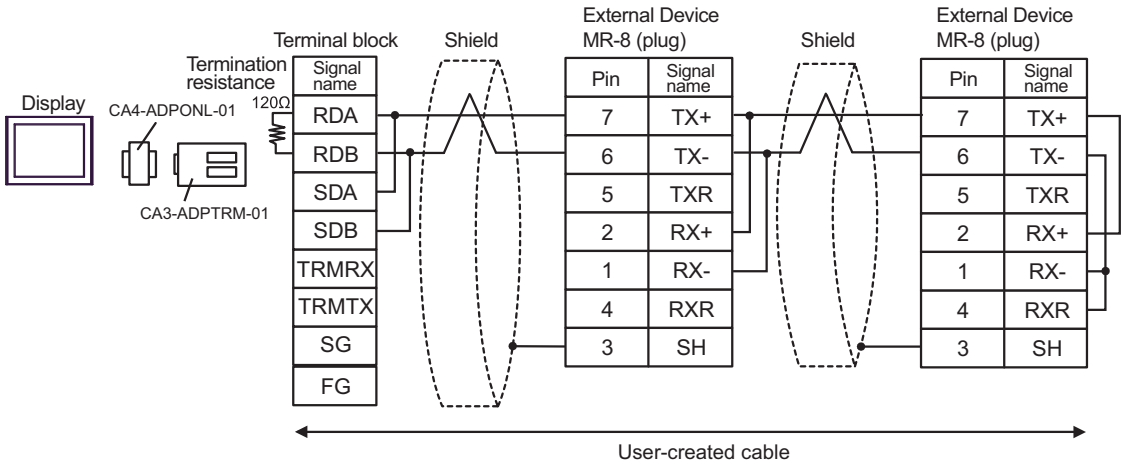

NOTE

- The cable length must be 300m or less.

5D)

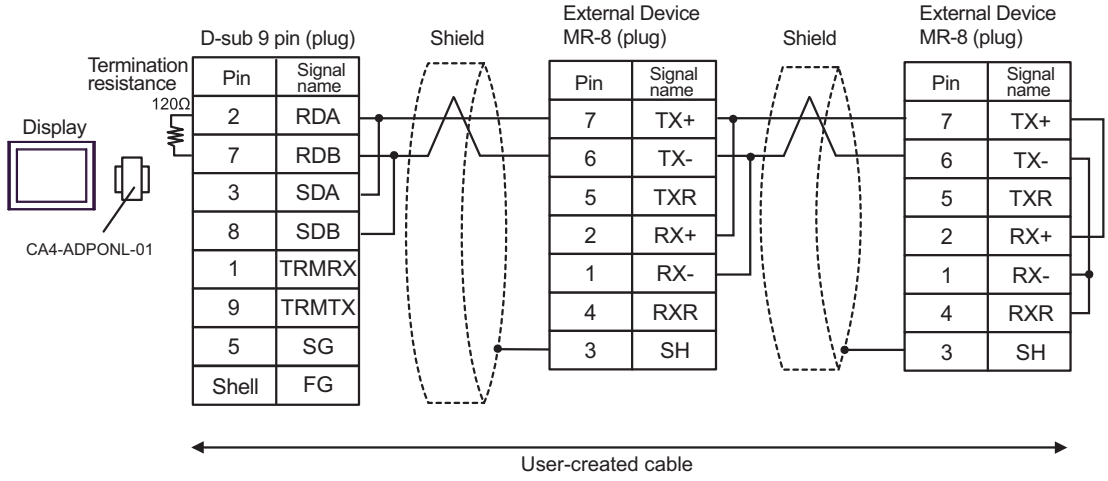

NOTE

- The cable length must be 300m or less.

5E)

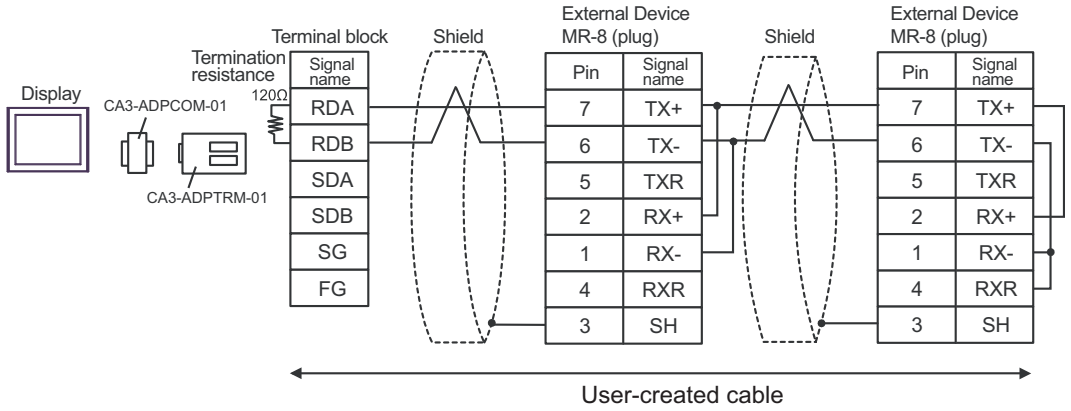

NOTE
- The cable length must be 300m or less.

5F)

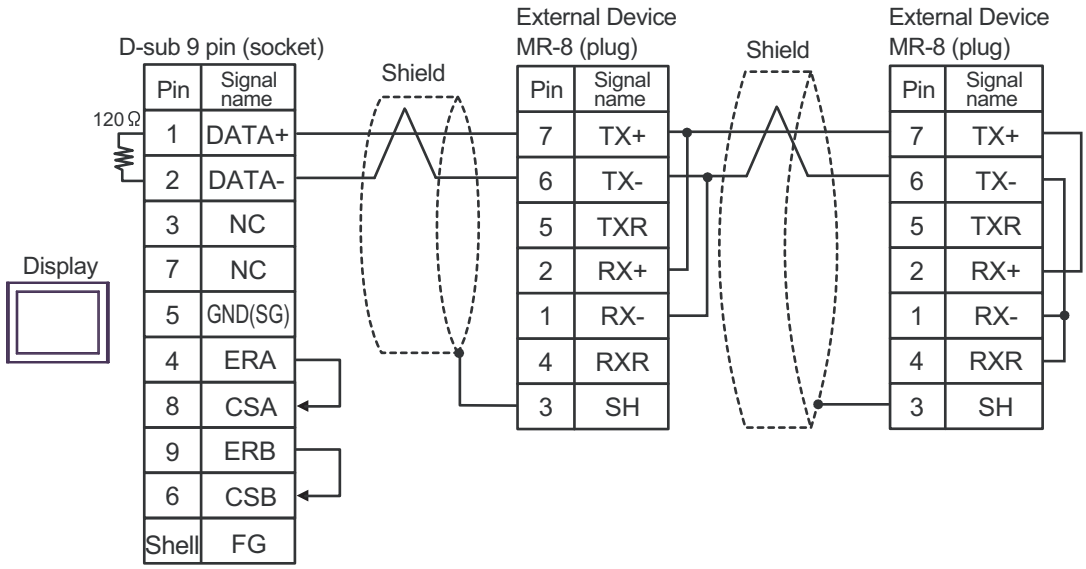

NOTE
- The cable length must be 300m or less.

5G)

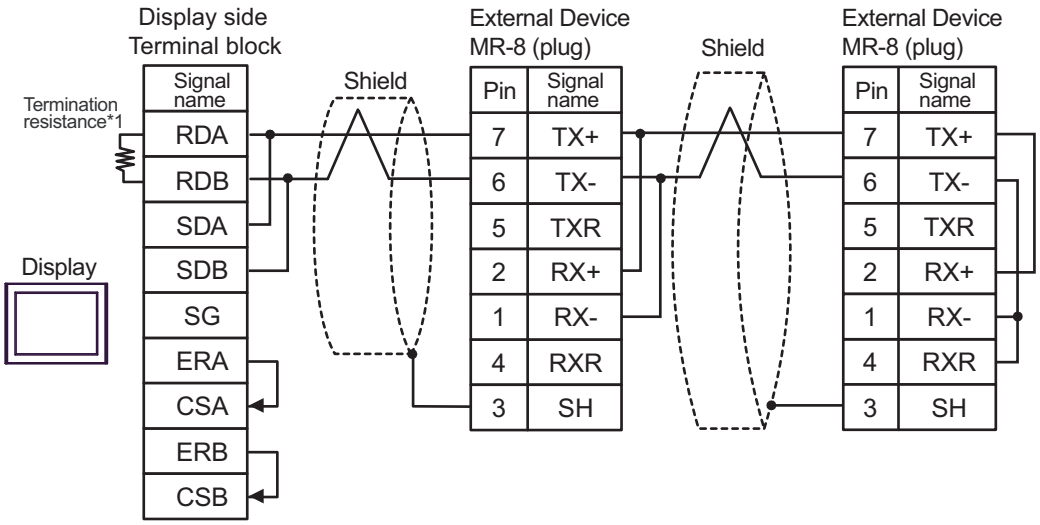

*1 The resistance in the Display is used as the termination resistance. Set the value of the DIP Switch on the rear of the Display as shown in the table below.

DIP Switch No.	Set Value
1	OFF
2	OFF
3	ON
4	ON

NOTE

- The cable length must be 300m or less.

5H)

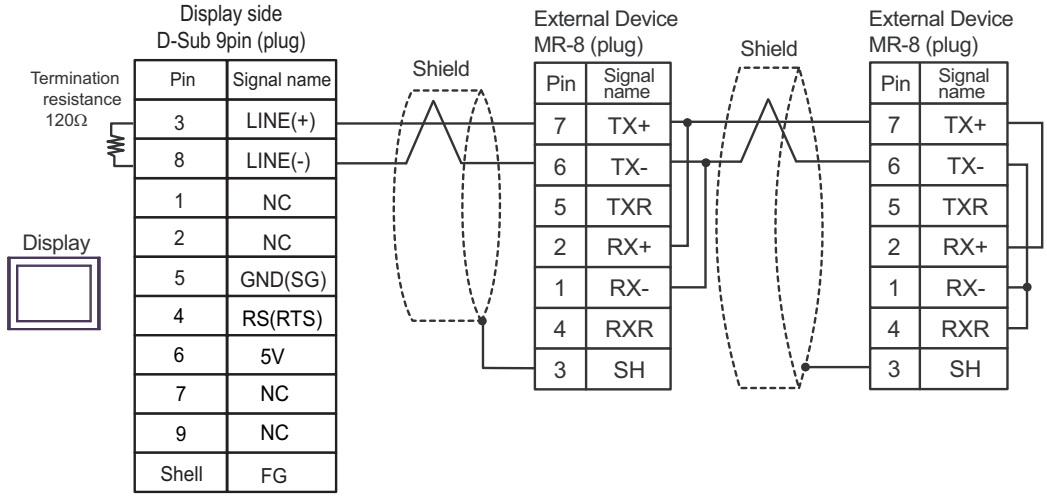

IMPORTANT

- The 5V output (Pin #6) on the Display is the power for the Siemens AG's PROFIBUS connector. Do not use it for other devices.

NOTE

- In COM on the GP-4107, the SG and FG terminals are isolated.
- The cable length must be 300m or less.

5I)

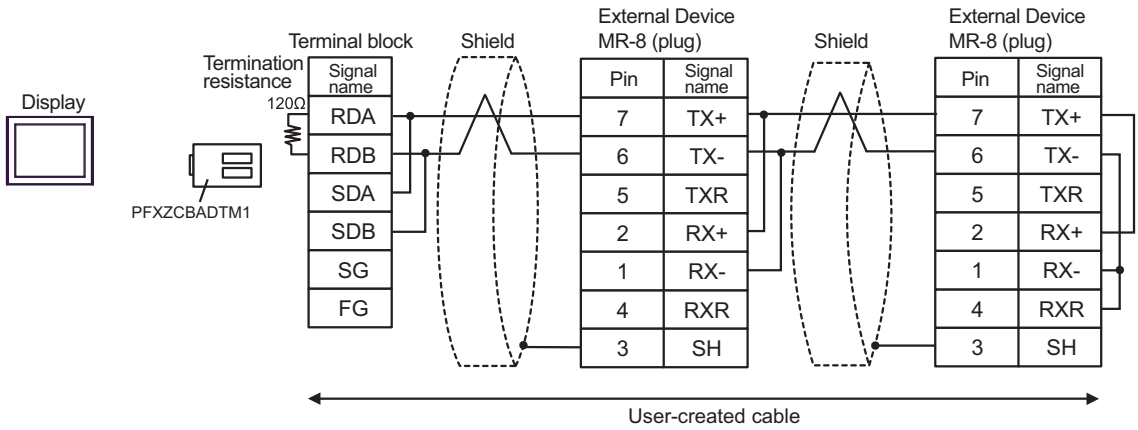

NOTE

- The cable length must be 300m or less.

5J)

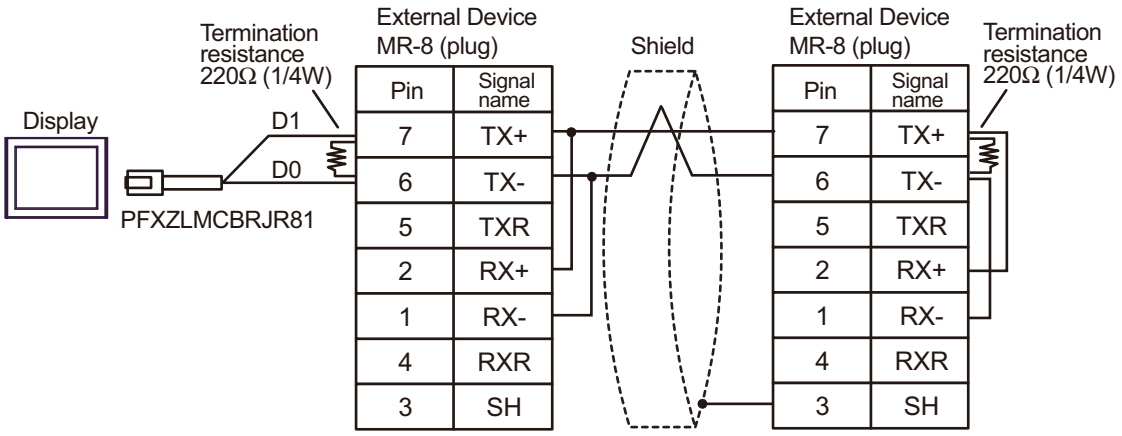

NOTE

- The cable length must be 200m or less.

5K)

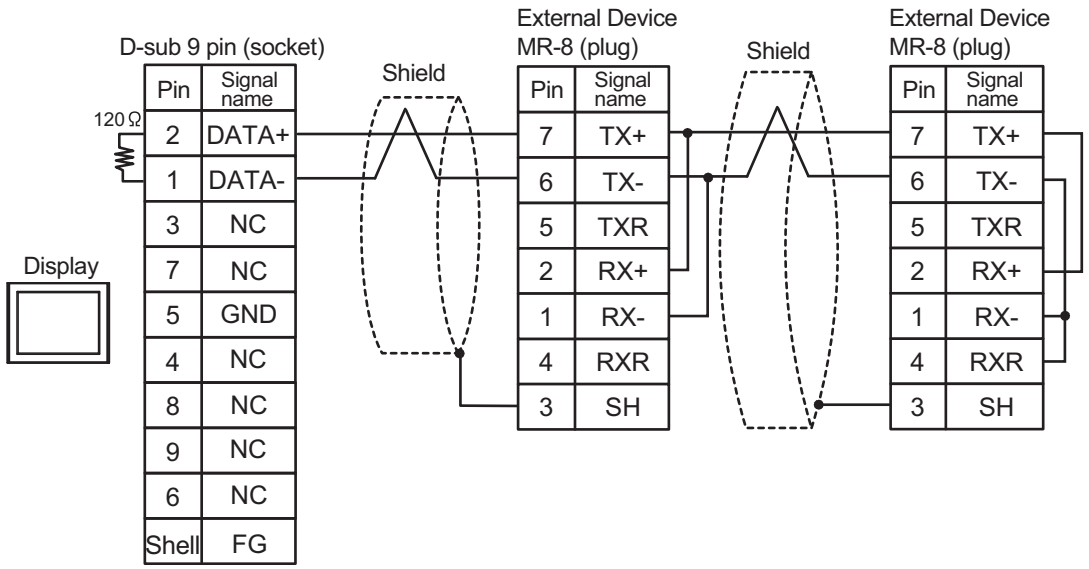

NOTE

- The cable length must be 300m or less.

5.6 Cable Diagram 6

Display (Connection Port)	Cable		Remarks
GP3000 (COM1) GP4000*1 (COM1) SP5000*2 (COM1/2) SP-5B00 (COM1) ST3000 (COM1) ST6000 (COM1) STM6000 (COM1) STC6000 (COM1) ET6000 (COM1) LT3000 (COM1) IPC*3 PC/AT	6A	User-created cable	The cable length must be 15m or less.
GP-4105 (COM1) GP-4115T (COM1) GP-4115T3 (COM1)	6B	User-created cable	The cable length must be 15m or less.
LT-4*01TM (COM1) LT-Rear Module (COM1)	6C	RJ45 RS-232C Cable (5m) by Pro-face PFXZLMCBRJR21	The cable length must be 5m or less.

*1 All GP4000 models except GP-4100 series and GP-4203T

*2 Except SP-5B00

*3 Only the COM port which can communicate by RS-232C can be used.

■ IPC COM Port (page 7)

6A)

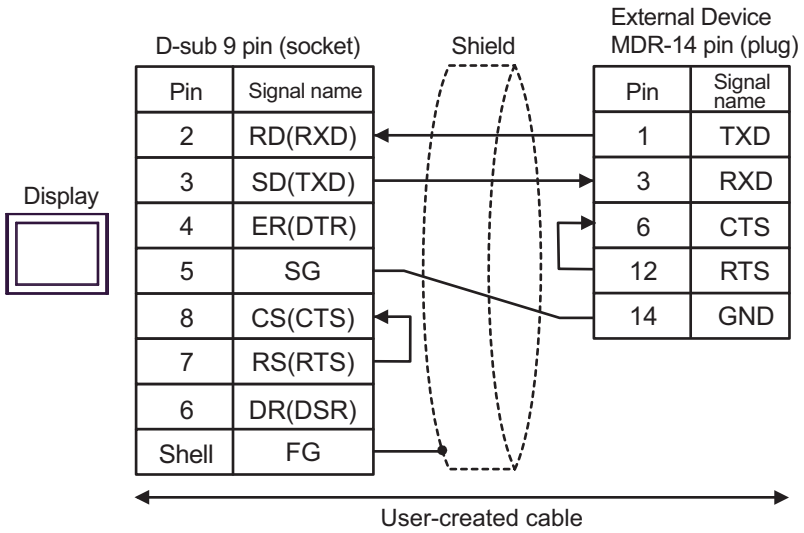

NOTE

- The cable length must be 15m or less.

6B)

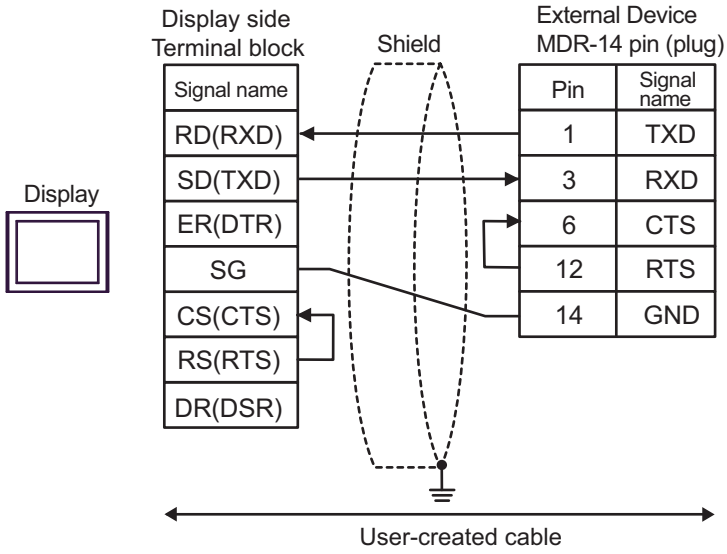

NOTE
- The cable length must be 15m or less.

6C)

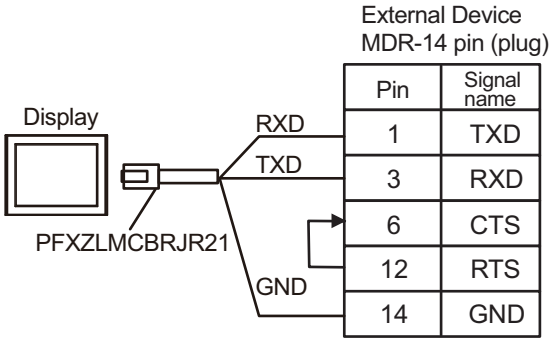

NOTE
- The cable length must be 5m or less.

5.7 Cable Diagram 7

Display (Connection Port)	Cable		Remarks
GP3000[*1] (COM1) AGP-3302B (COM2) GP-4*01TM (COM1) GP-Rear Module (COM1) ST3000[*2] (COM2) LT3000 (COM1) IPC[*3]	7A	COM Port Conversion Adapter by Pro-face CA3-ADPCOM-01 + Terminal Block Conversion Adapter by Pro-face CA3-ADPTRM-01 + User-created cable	The cable length must be 300m or less.
	7B	User-created cable	
GP3000[*4] (COM2)	7C	Online adapter by Pro-face (CA4-ADPONL-01) + Terminal block conversion adapter by Pro-face CA3-ADPTRM-01 + User-created cable	The cable length must be 300m or less.
	7D	Online adapter by Pro-face (CA4-ADPONL-01) + User-created cable	
GP-4106 (COM1) GP-4116T (COM1)	7E	User-created cable	The cable length must be 300m or less.
GP4000[*5] (COM2) GP-4201T (COM1) SP5000[*6] (COM1/2) SP-5B00 (COM2) ST6000[*7] (COM2) ST-6200 (COM1) STM6000 (COM1) STC6000 (COM1) ET6000[*8] (COM2) PS6000 (Basic Box) (COM1/2)	7F	RS-422 Terminal Block Conversion Adapter by Pro-face PFXZCBADTM1 [*9] + User-created cable	The cable length must be 300m or less.
	7B	User-created cable	
PE-4000B[*10] PS5000[*9] PS6000 (Optional Interface)[*9]	7G	User-created cable	The cable length must be 300m or less.

*1 All GP3000 models except AGP-3302B

*2 Except AST-3211A and AST-3302B

*3 Only the COM port which can communicate by RS-422/485 (4 wire) can be used. (Except PE-4000B, PS5000, and PS6000)

■ IPC COM Port (page 7)

*4 All GP3000 models except GP-3200 series and AGP-3302B

*5 All GP4000 models except GP-4100 series, GP-4*01TM, GP-Rear Module, GP-4201T and GP-4*03T

*6 Except SP-5B00

*7 Except ST-6200

*8 Due to the COM port specifications, flow control is not possible. Omit wiring the control pins on the Display side of the cable diagram.

*9 When using a Terminal Block Conversion Adapter (CA3-ADPTRM-01) instead of the RS-422 Terminal Block Conversion Adapter, refer to Cable Diagram 7A.

*10 Only the COM port which can communicate by RS-422/485 (4 wire) can be used.

■ IPC COM Port (page 7)

7A)

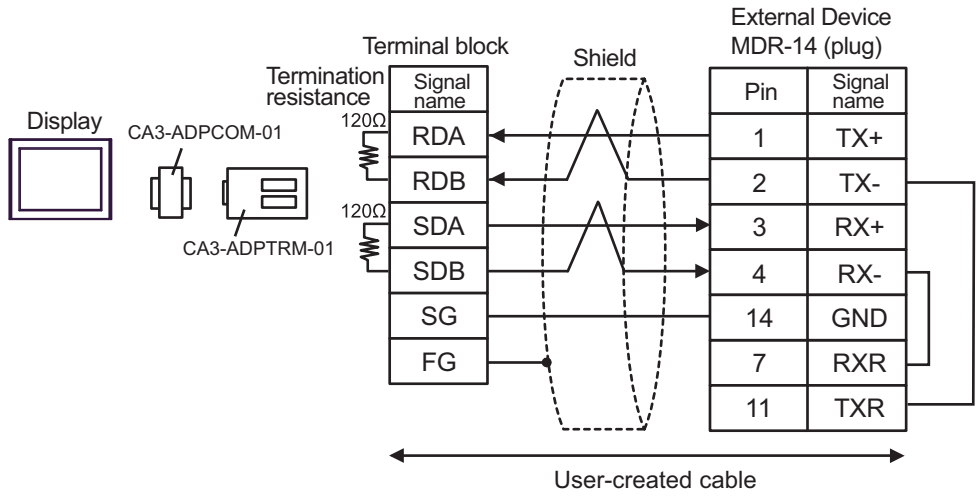

NOTE

- The cable length must be 300m or less.

7B)

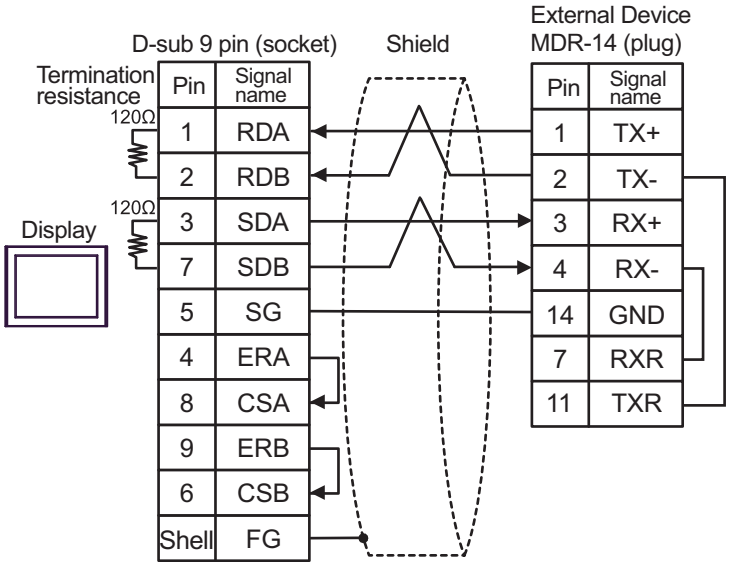

NOTE
- The cable length must be 300m or less.

7C)

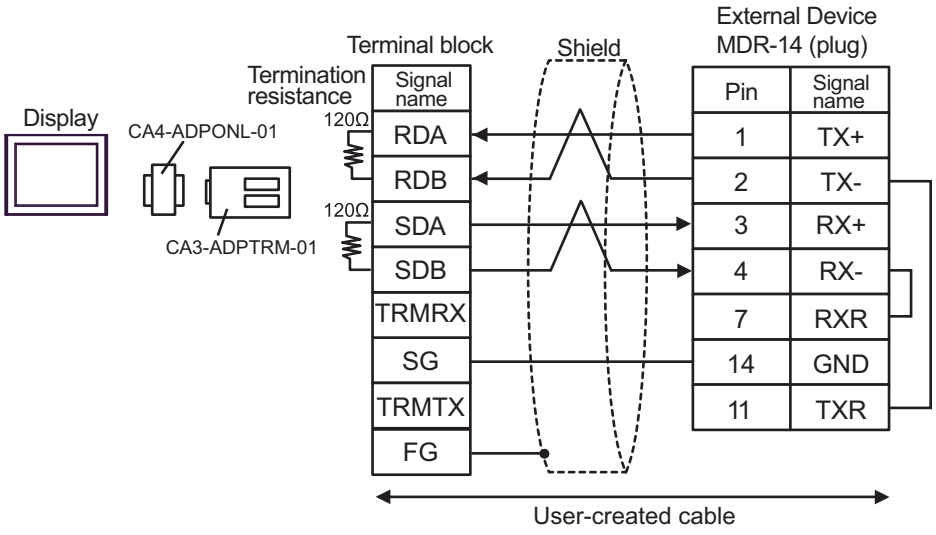

NOTE
- The cable length must be 300m or less.

7D)

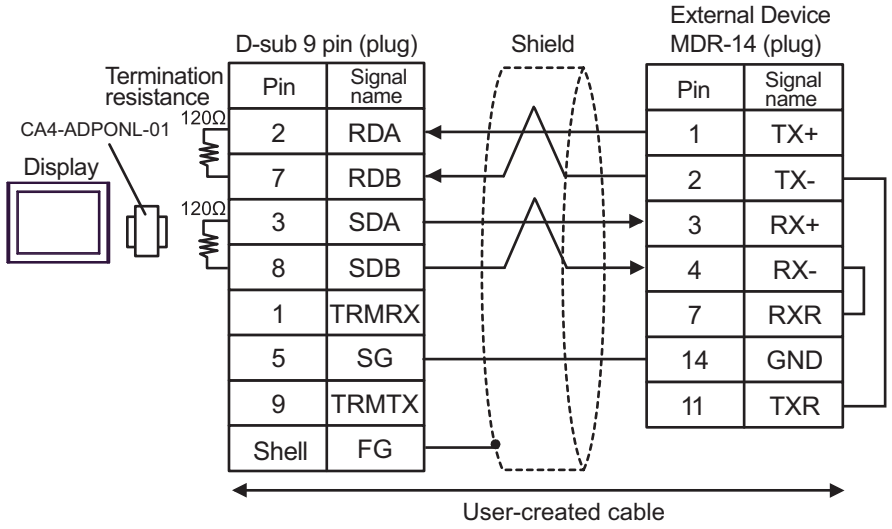

NOTE

- The cable length must be 300m or less.

7E)

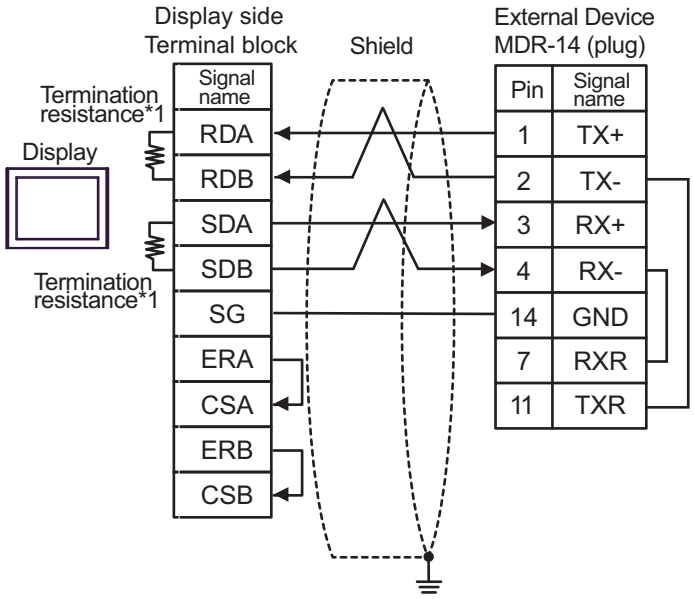

*1 The resistance in the Display is used as the termination resistance. Set the value of the DIP Switch on the rear of the Display as shown in the table below.

DIP Switch No.	Set Value
1	ON
2	ON
3	ON
4	ON

NOTE

- The cable length must be 300m or less.

7F)

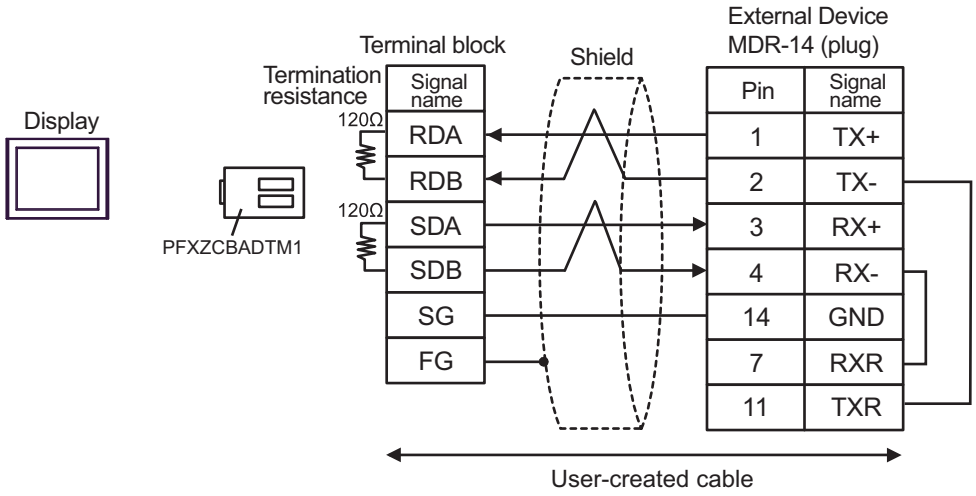

NOTE

- The cable length must be 300m or less.

7G)

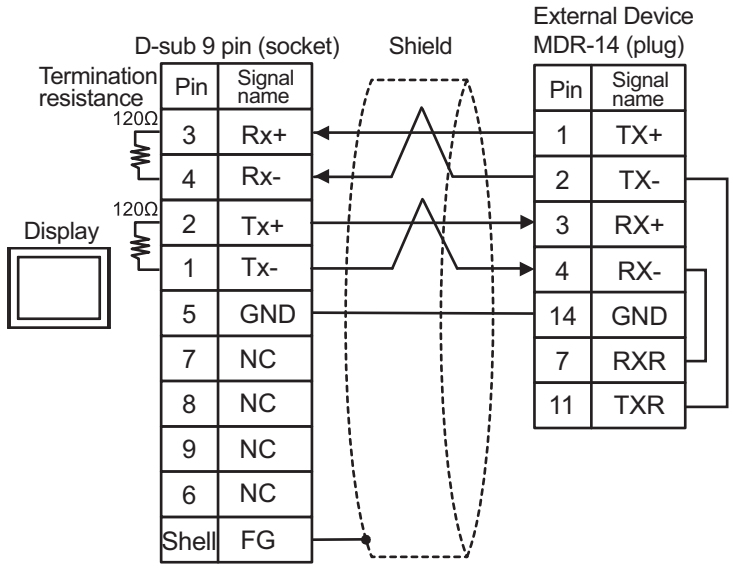

NOTE

- The cable length must be 300m or less.

5.8 Cable Diagram 8

Display (Connection Port)	Cable		Remarks
GP3000[*1] (COM1) AGP-3302B (COM2) GP-4*01TM (COM1) GP-Rear Module (COM1) ST3000[*2] (COM2) LT3000 (COM1)	8A	COM Port Conversion Adapter by Pro-face CA3-ADPCOM-01 + Terminal Block Conversion Adapter by Pro-face CA3-ADPTRM-01 + User-created cable	The cable length must be 300m or less.
	8B	User-created cable	
GP3000[*3] (COM2)	8C	Online adapter by Pro-face (CA4-ADPONL-01) + Terminal block conversion adapter by Pro-face CA3-ADPTRM-01 + User-created cable	The cable length must be 300m or less.
	8D	Online adapter by Pro-face (CA4-ADPONL-01) + User-created cable	
IPC[*4]	8E	COM port conversion adapter by Pro-face CA3-ADPCOM-01 + Terminal block conversion adapter by Pro-face CA3-ADPTRM-01 + User-created cable	The cable length must be 300m or less.
	8F	User-created cable	
GP-4106 (COM1) GP-4116T (COM1)	8G	User-created cable	The cable length must be 300m or less.
GP-4107 (COM1) GP-4*03T[*5] (COM2) GP-4203T (COM1)	8H	User-created cable	The cable length must be 300m or less.
GP4000[*6] (COM2) GP-4201T (COM1) SP5000[*7] (COM1/2) SP-5B00 (COM2) ST6000[*8] (COM2) ST-6200 (COM1) STM6000 (COM1) STC6000 (COM1) ET6000[*9] (COM2) PS6000 (Basic Box) (COM1/2)	8I	RS-422 Terminal Block Conversion Adapter by Pro-face PFXZCBADTM1 [*10] + User-created cable	The cable length must be 300m or less.
	8B	User-created cable	

Display (Connection Port)	Cable		Remarks
LT-4*01TM (COM1) LT-Rear Module (COM1)	8J	RJ45 RS-485 Cable (5m) by Pro-face PFXZLMCBRJR81	The cable length must be 200m or less.
PE-4000B*11 PS5000*10 PS6000 (Optional Interface)*10	8K	User-created cable	The cable length must be 300m or less.

*1 All GP3000 models except AGP-3302B

*2 Except AST-3211A and AST-3302B

*3 All GP3000 models except GP-3200 series and AGP-3302B

*4 Only the COM port which can communicate by RS-422/485 (2 wire) can be used. (Except PE-4000B, PS5000, and PS6000)

■ IPC COM Port (page 7)

*5 Except GP-4203T

*6 All GP4000 models except GP-4100 series, GP-4*01TM, GP-Rear Module, GP-4201T and GP-4*03T

*7 Except SP-5B00

*8 Except ST-6200

*9 Due to the COM port specifications, flow control is not possible. Omit wiring the control pins on the Display side of the cable diagram.

*10 When using a Terminal Block Conversion Adapter (CA3-ADPTRM-01) instead of the RS-422 Terminal Block Conversion Adapter, refer to Cable Diagram 8A.

*11 Only the COM port which can communicate by RS-422/485 (2 wire) can be used.

■ IPC COM Port (page 7)

8A)

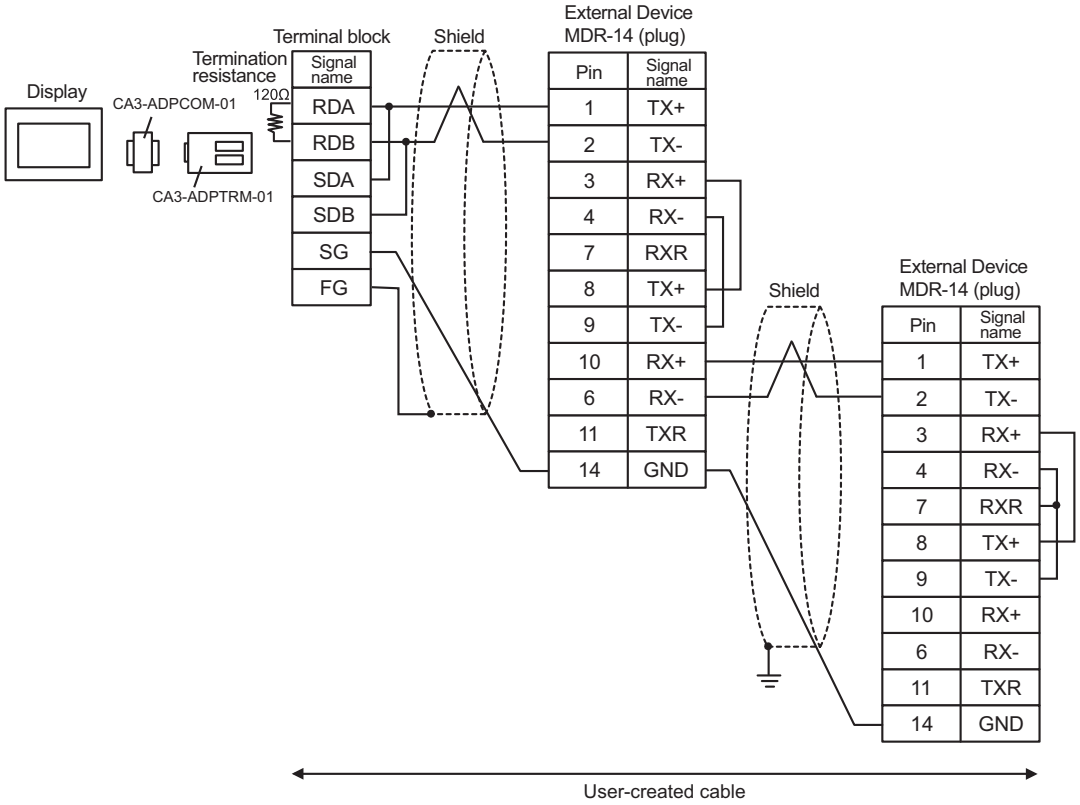

NOTE

- The cable length must be 300m or less.

8B)

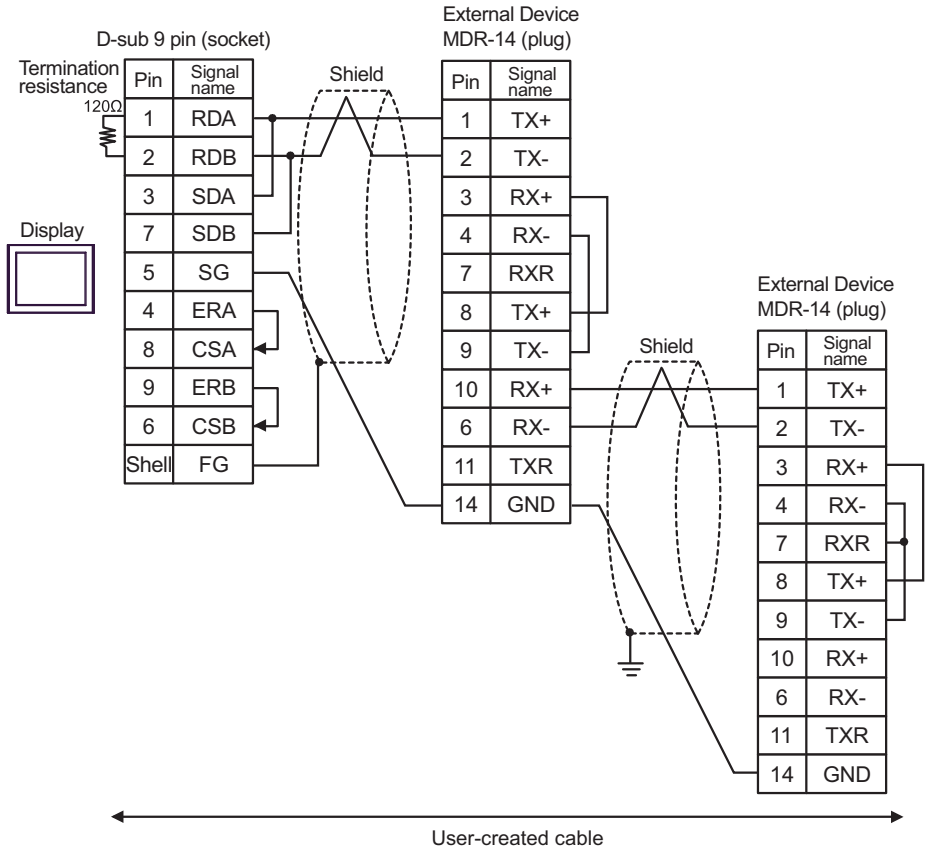

NOTE • The cable length must be 300m or less.

8C)

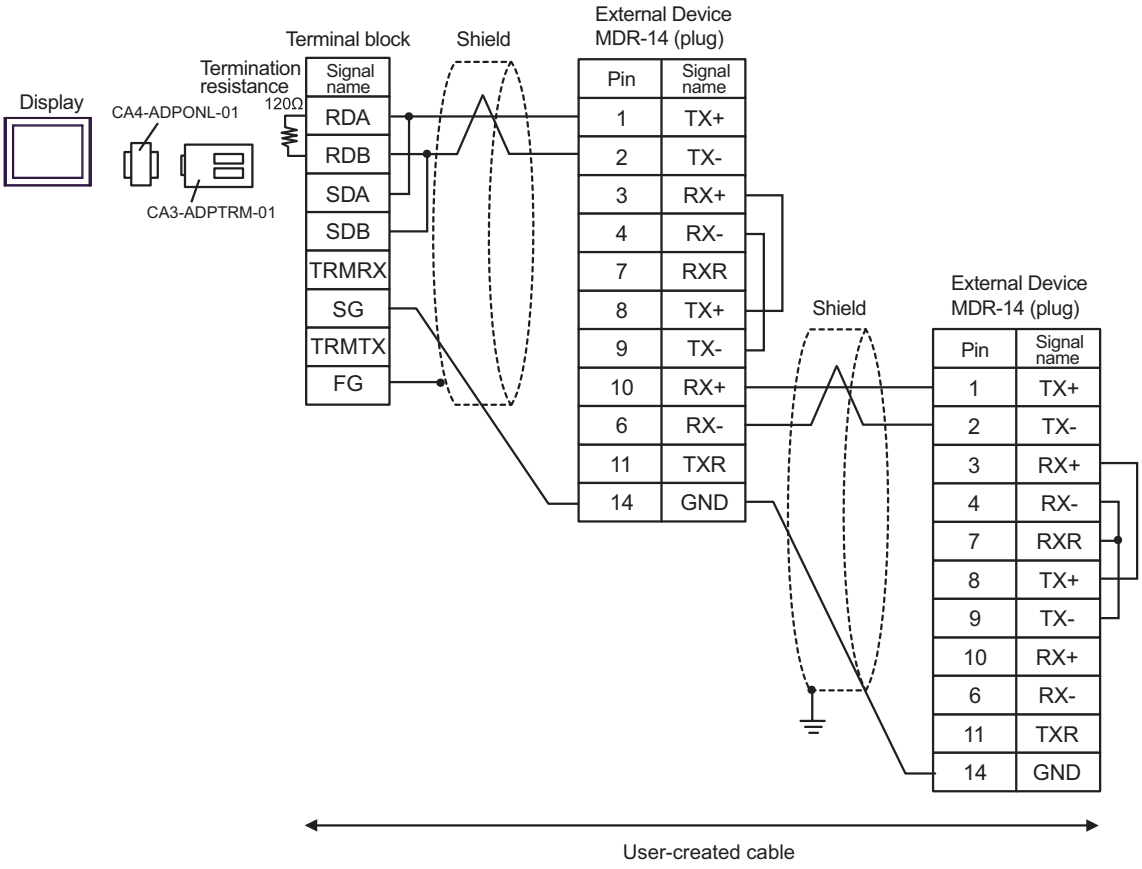

NOTE

- The cable length must be 300m or less.

8D)

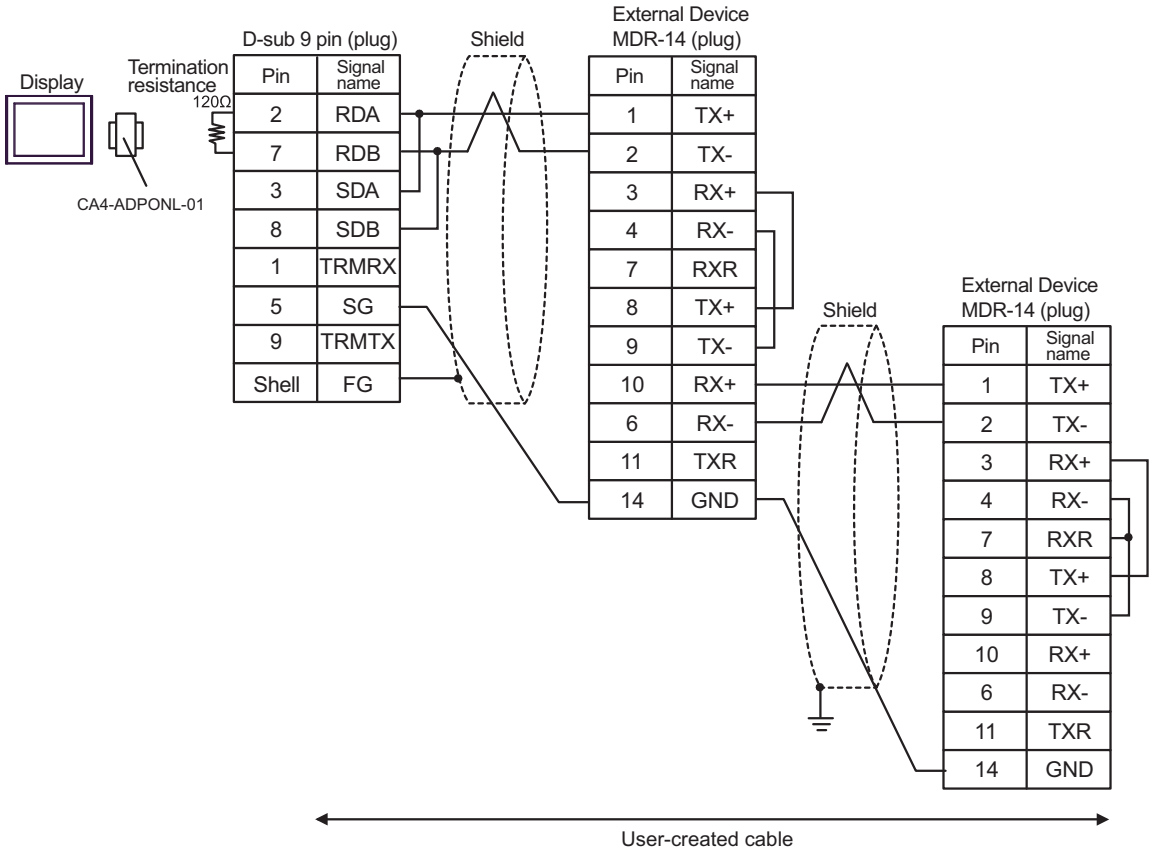

NOTE

- The cable length must be 300m or less.

8E)

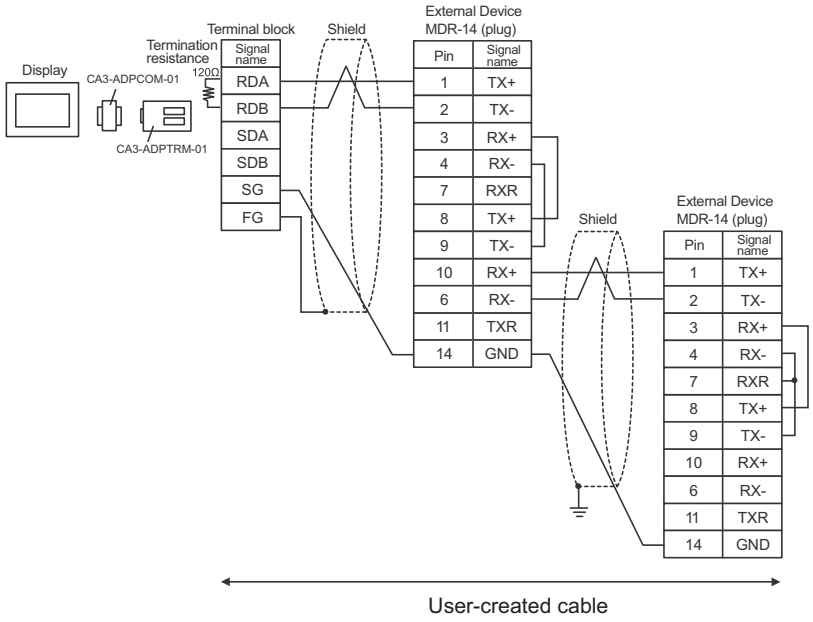

NOTE

- The cable length must be 300m or less.

8F)

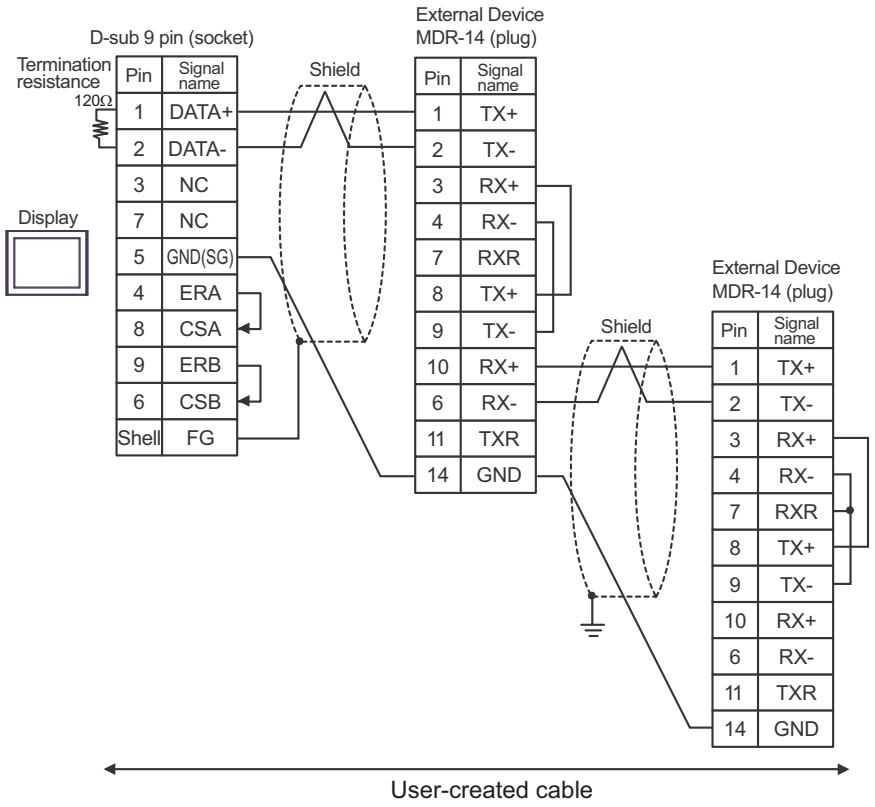

NOTE

- The cable length must be 300m or less.

8G)

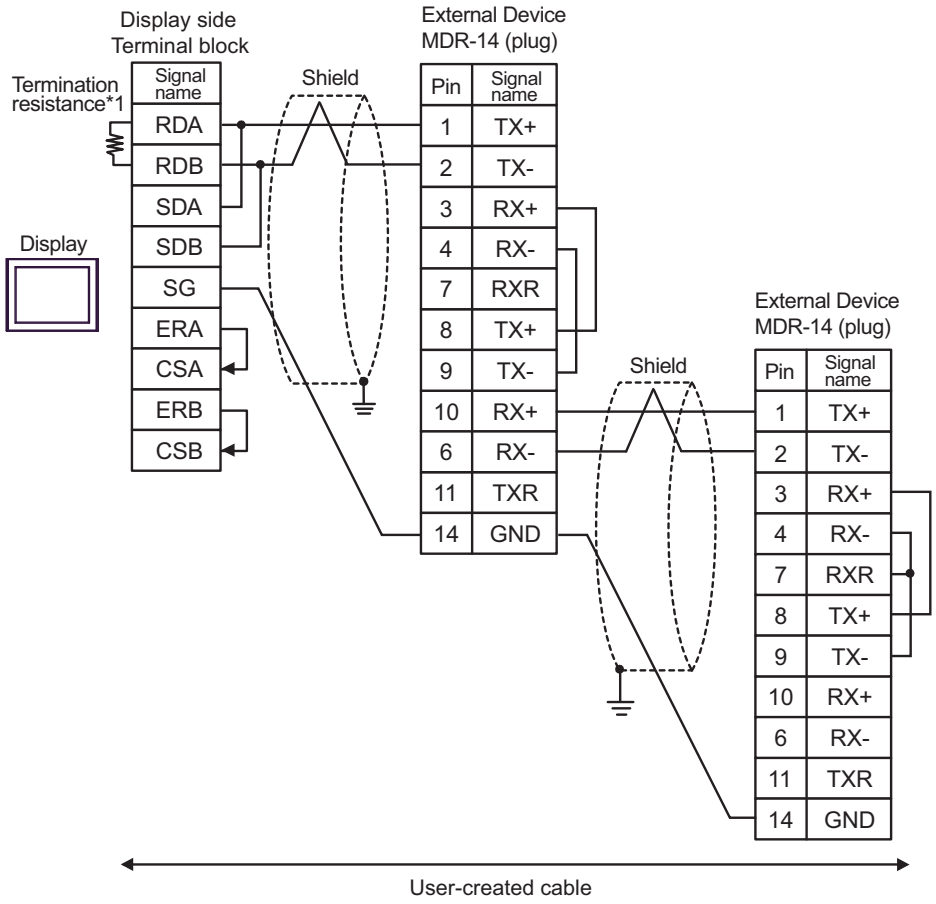

*1 The resistance in the Display is used as the termination resistance. Set the value of the DIP Switch on the rear of the Display as shown in the table below.

DIP Switch No.	Set Value
1	OFF
2	OFF
3	ON
4	ON

NOTE

- The cable length must be 300m or less.

8H)

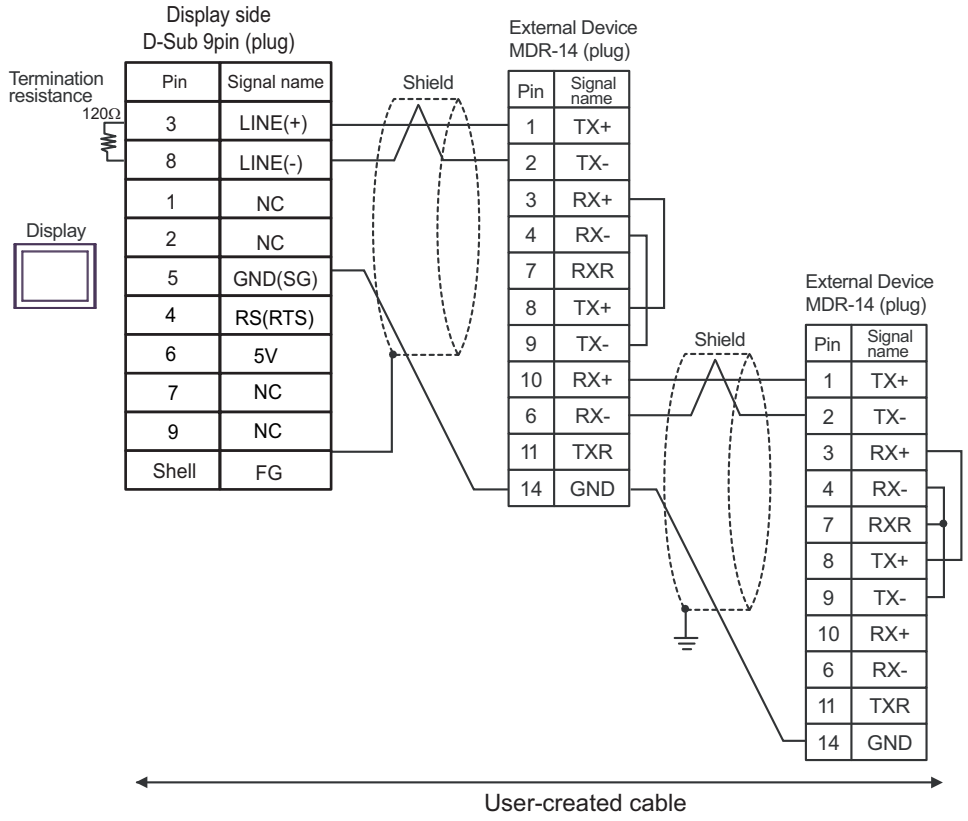

IMPORTANT

- The 5V output (Pin #6) on the Display is the power for the Siemens AG's PROFIBUS connector. Do not use it for other devices.

NOTE

- In COM on the GP-4107, the SG and FG terminals are isolated.
- The cable length must be 300m or less.

8I)

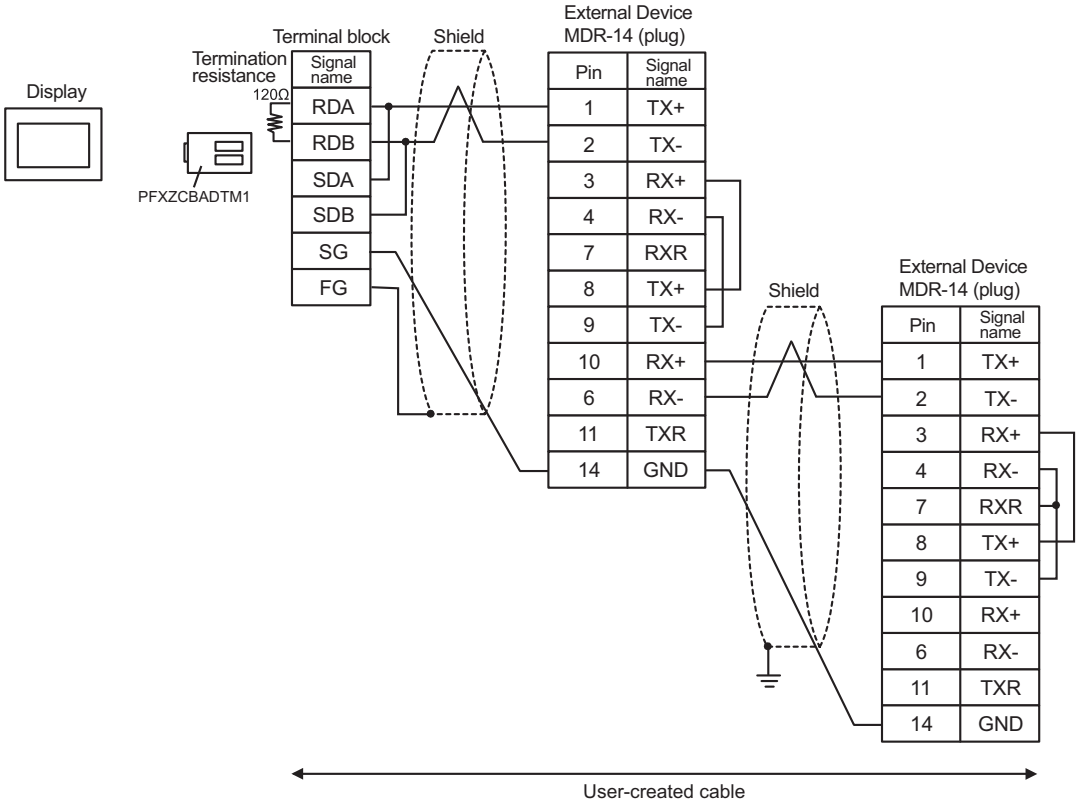

NOTE

- The cable length must be 300m or less.

8J)

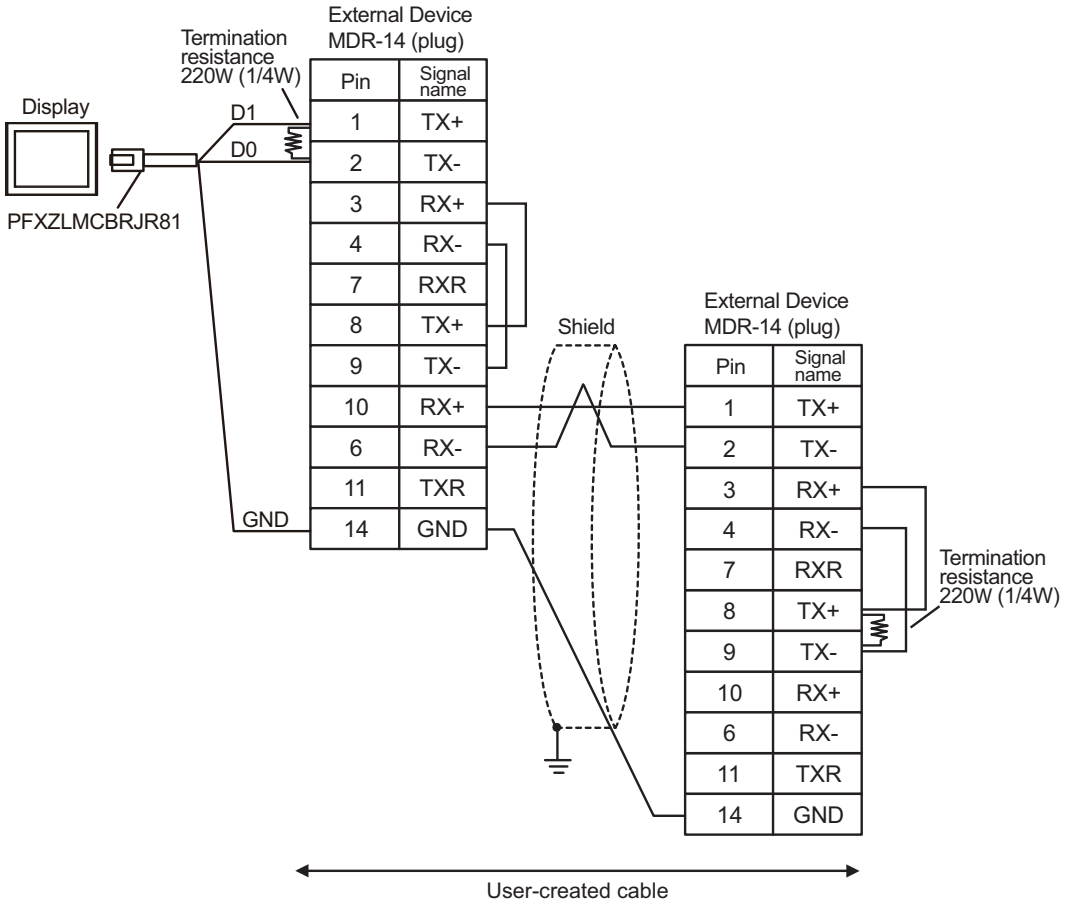

NOTE

- The cable length must be 200m or less.

8K)

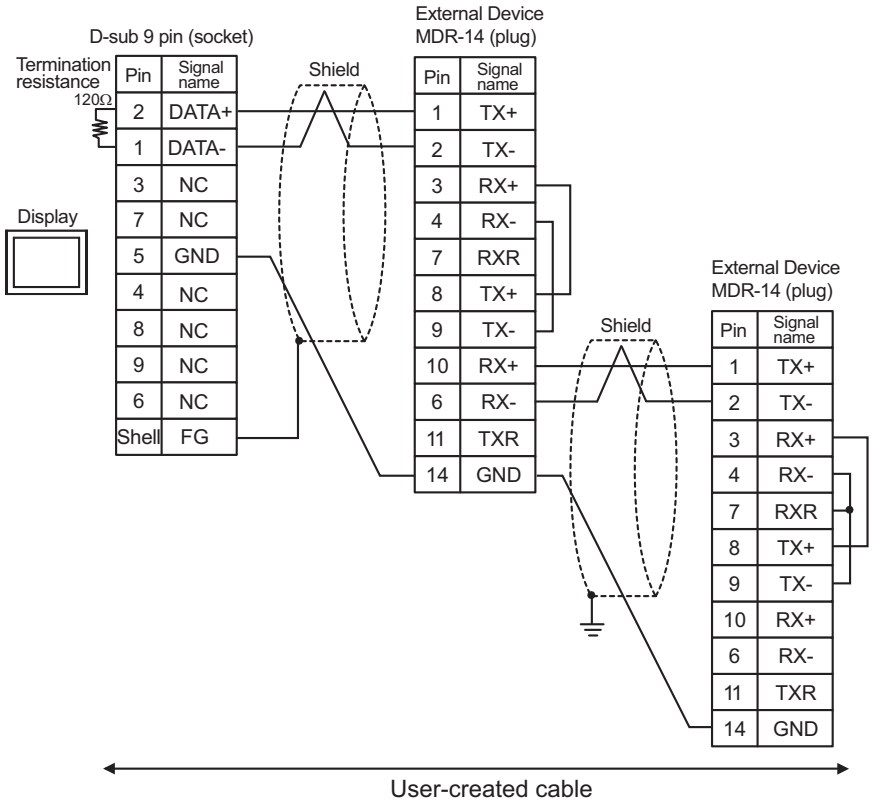

NOTE

- The cable length must be 300m or less.

5.9 Cable Diagram 9

Display (Connection Port)	Cable		Remarks
GP3000 (COM1) GP4000*1 (COM1) SP5000*2 (COM1/2) SP-5B00 (COM1) ST3000 (COM1) ST6000 (COM1) STM6000 (COM1) STC6000 (COM1) ET6000 (COM1) LT3000 (COM1) IPC*3 PC/AT	9A	User-created cable	The cable length must be 15m or less.
GP-4105 (COM1) GP-4115T (COM1) GP-4115T3 (COM1)	9B	User-created cable	The cable length must be 15m or less.
LT-4*01TM (COM1) LT-Rear Module (COM1)	9C	RJ45 RS-232C Cable (5m) by Pro-face PFXZLMCBRJR21	The cable length must be 5m or less.

*1 All GP4000 models except GP-4100 series and GP-4203T

*2 Except SP-5B00

*3 Only the COM port which can communicate by RS-232C can be used.

■ IPC COM Port (page 7)

9A)

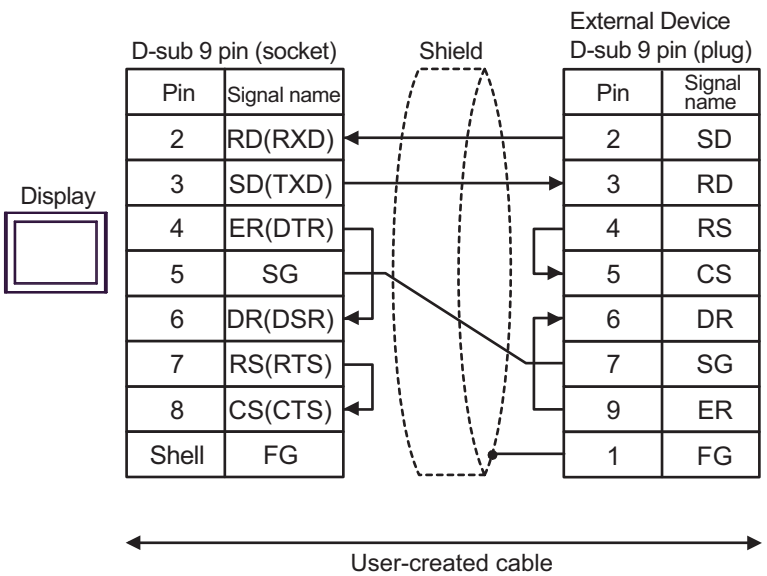

NOTE

- The cable length must be 15m or less.

9B)

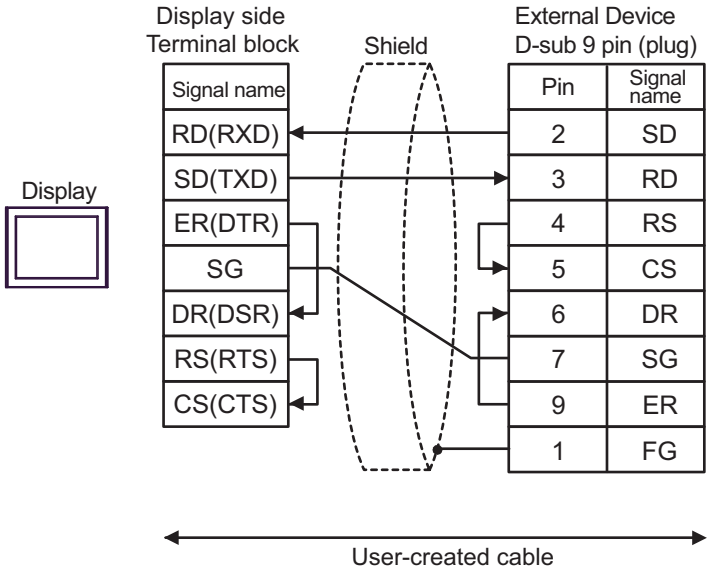

NOTE
- The cable length must be 15m or less.

9C)

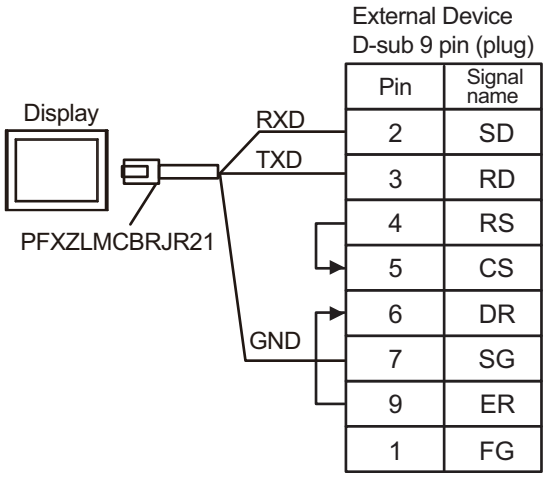

NOTE
- The cable length must be 5m or less.

5.10 Cable Diagram10

Display (Connection Port)	Cable		Remarks
GP3000 (COM1) GP4000*1 (COM1) SP5000*2 (COM1/2) SP-5B00 (COM1) ST3000 (COM1) ST6000 (COM1) STM6000 (COM1) STC6000 (COM1) ET6000 (COM1) LT3000 (COM1) IPC*3 PC/AT	10A	Cable by YASKAWA Electric Corporation JZMSZ-120W0202-3/JZMSZ-120W0202-15	The cable length must be 15m or less.
	10B	User-created cable	
GP-4105 (COM1) GP-4115T (COM1) GP-4115T3 (COM1)	10C	User-created cable	The cable length must be 15m or less.

*1 All GP4000 models except GP-4100 series and GP-4203T

*2 Except SP-5B00

*3 Only the COM port which can communicate by RS-232C can be used.

■ IPC COM Port (page 7)

10A)

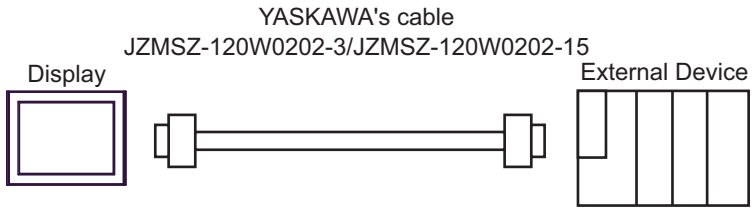

10B)

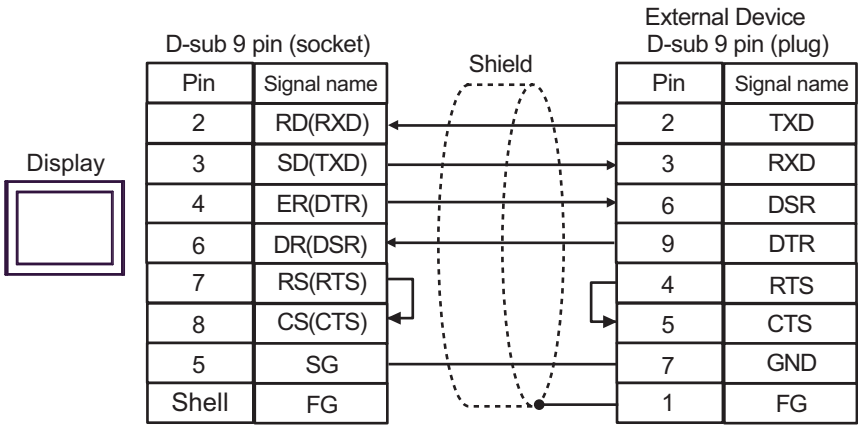

NOTE
- The cable length must be 15m or less.

10C)

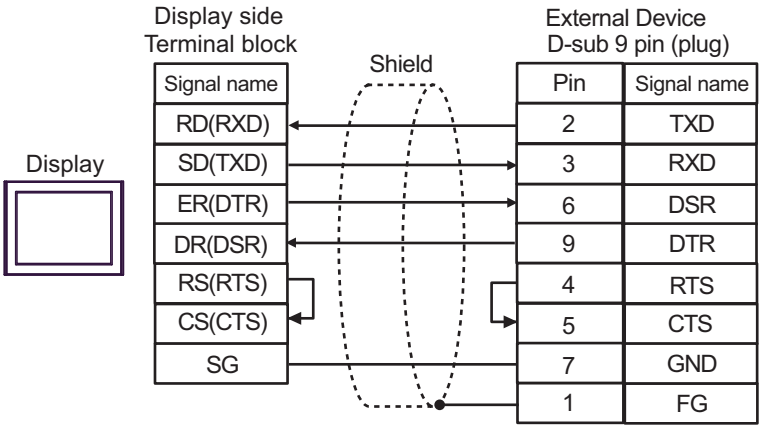

NOTE
- The cable length must be 15m or less.

5.11 Cable Diagram 11

Display (Connection Port)	Cable		Remarks
GP3000[*1] (COM1) AGP-3302B (COM2) GP-4*01TM (COM1) GP-Rear Module (COM1) ST3000[*2] (COM2) LT3000 (COM1) IPC[*3]	11A	COM Port Conversion Adapter by Pro-face CA3-ADPCOM-01 + Terminal Block Conversion Adapter by Pro-face CA3-ADPTRM-01 + User-created cable	The cable length must be 500 meters or less.
	11B	User-created cable	
GP3000[*4] (COM2)	11C	Online adapter by Pro-face CA4-ADPONL-01 + Terminal block conversion adapter by Pro-face CA3-ADPTRM-01 + User-created cable	The cable length must be 500 meters or less.
	11D	Online adapter by Pro-face CA4-ADPONL-01 + User-created cable	
GP-4106 (COM1) GP-4116T (COM1)	11E	User-created cable	The cable length must be 500 meters or less.
GP4000[*5] (COM2) GP-4201T (COM1) SP5000[*6] (COM1/2) SP-5B00 (COM2) ST6000[*7] (COM2) ST-6200 (COM1) STM6000 (COM1) STC6000 (COM1) ET6000[*8] (COM2) PS6000 (Basic Box) (COM1/2)	11F	RS-422 Terminal Block Conversion Adapter by Pro-face PFXZCBADTM1 [*9] + User-created cable	The cable length must be 500 meters or less.
	11B	User-created cable	
PE-4000B[*10] PS5000[*9] PS6000 (Optional Interface)[*9]	11G	User-created cable	The cable length must be 500 meters or less.

*1 All GP3000 models except AGP-3302B

*2 Except AST-3211A and AST-3302B

*3 Only the COM port which can communicate by RS-422/485 (4 wire) can be used. (Except PE-4000B, PS5000, and PS6000)

■ IPC COM Port (page 7)

*4 All GP3000 models except GP-3200 series and AGP-3302B

*5 All GP4000 models except GP-4100 series, GP-4*01TM, GP-Rear Module, GP-4201T and GP-4*03T

*6 Except SP-5B00

*7 Except ST-6200

*8 Due to the COM port specifications, flow control is not possible. Omit wiring the control pins on the Display side of the cable diagram.

*9 When using a Terminal Block Conversion Adapter (CA3-ADPTRM-01) instead of the RS-422 Terminal Block Conversion Adapter, refer to Cable Diagram 11A.

*10 Only the COM port which can communicate by RS-422/485 (4 wire) can be used.

■ IPC COM Port (page 7)

11A)

- 1:1 Connection

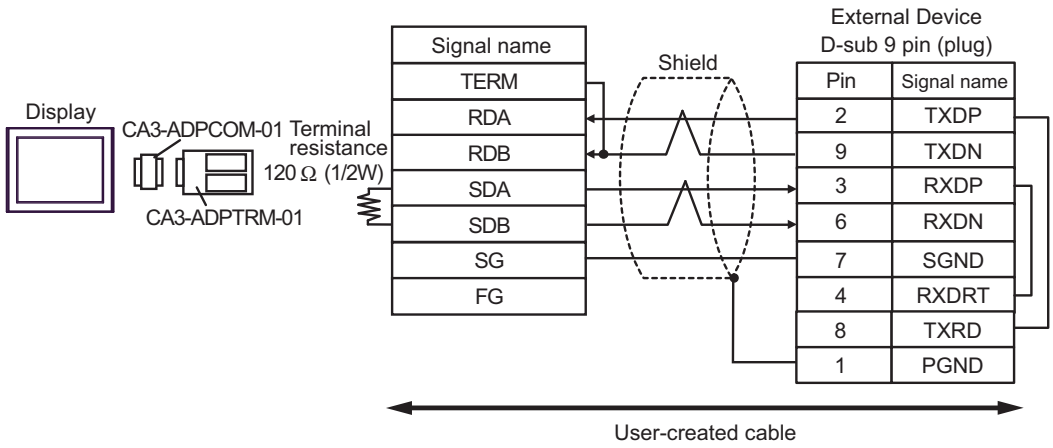

- 1:n Connection

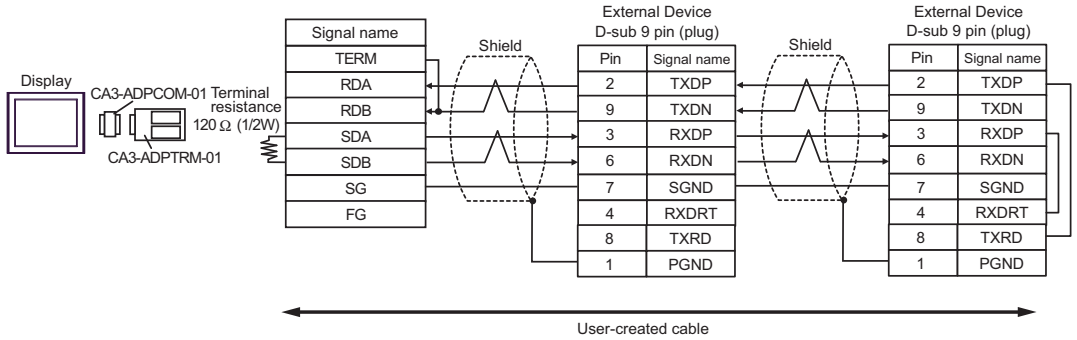

NOTE

- The cable length must be 500m or less.

11B)

- 1:1 Connection

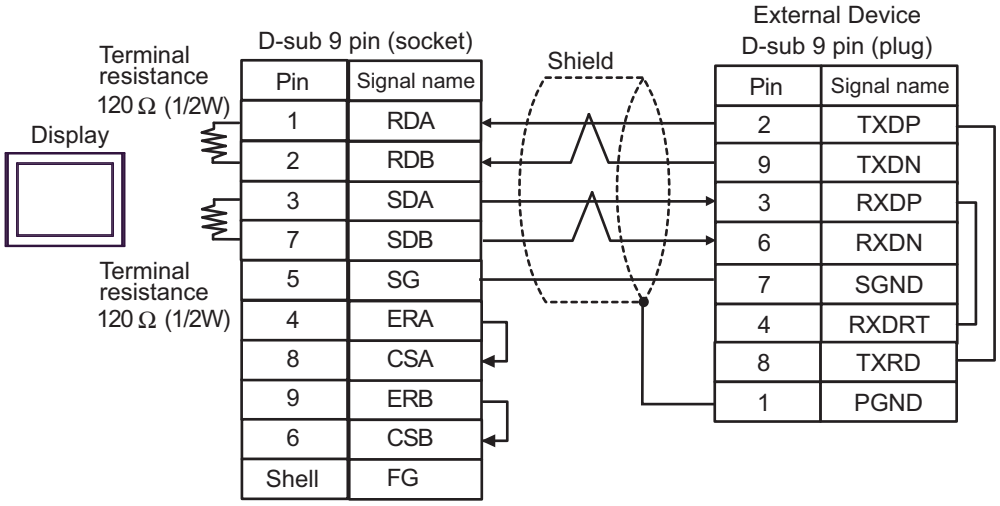

- 1:n Connection

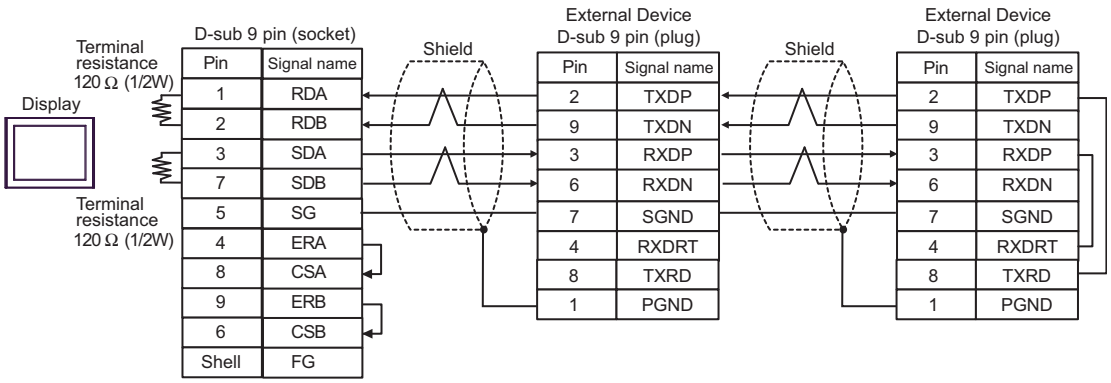

NOTE

- The cable length must be 500m or less.

11C)

- 1:1 Connection

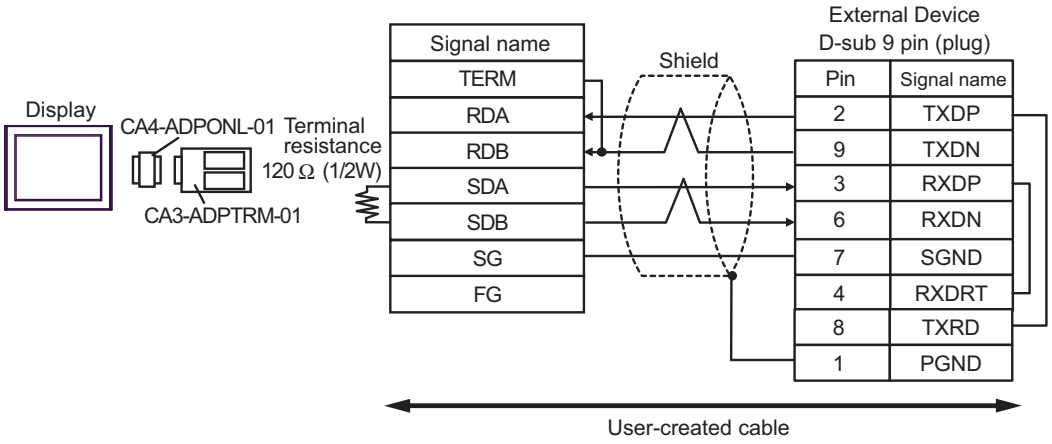

- 1:n Connection

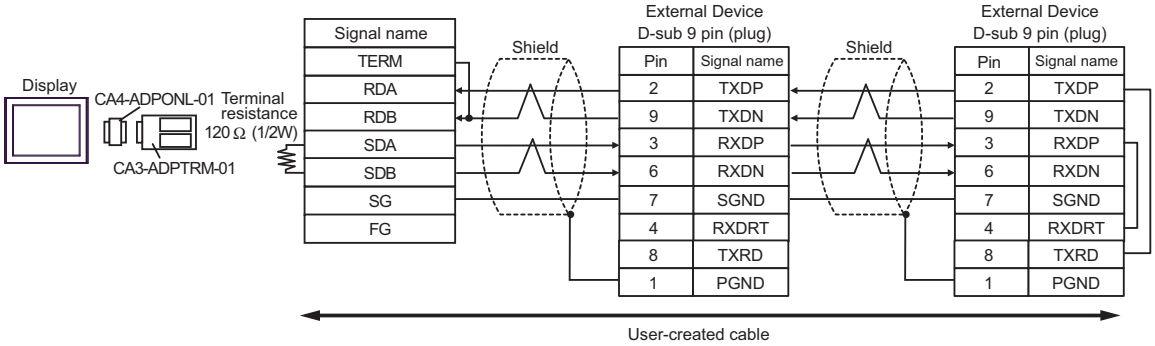

NOTE

- The cable length must be 500m or less.

11D)

- 1:1 Connection

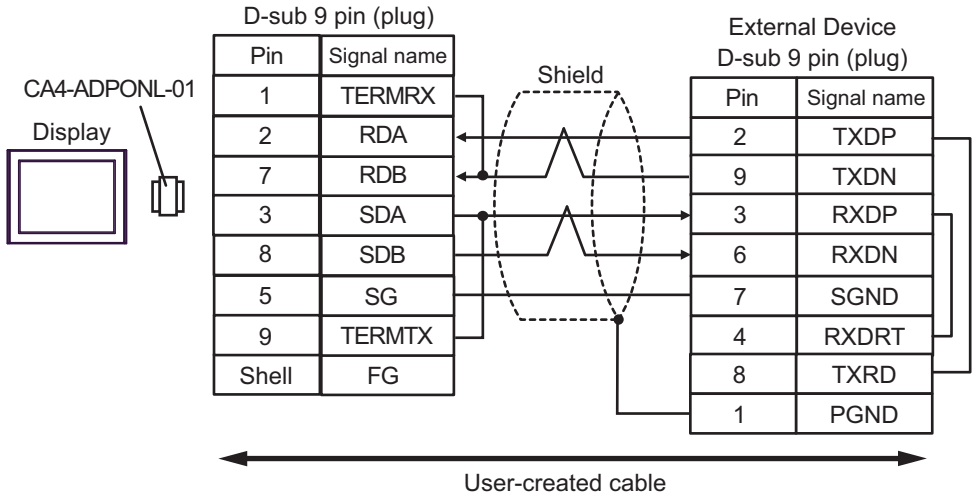

- 1:n Connection

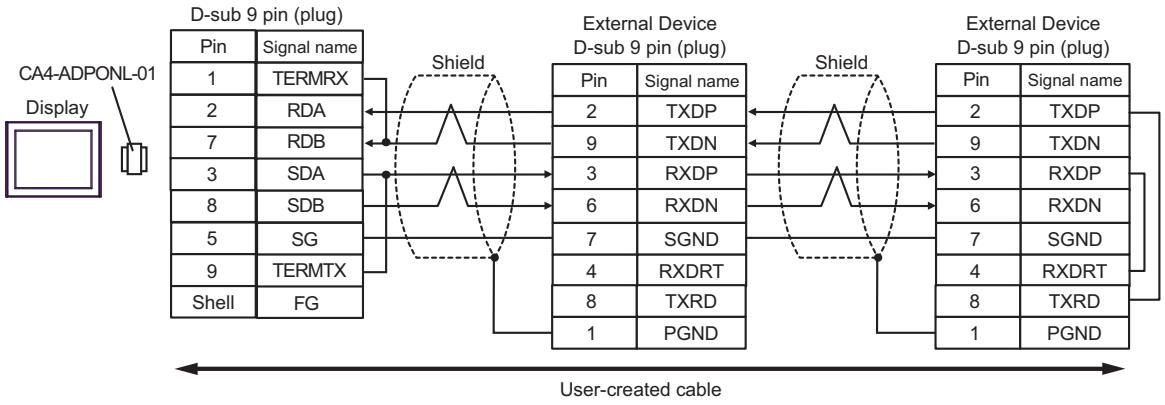

NOTE

- The cable length must be 500m or less.

11E)

- 1:1 Connection

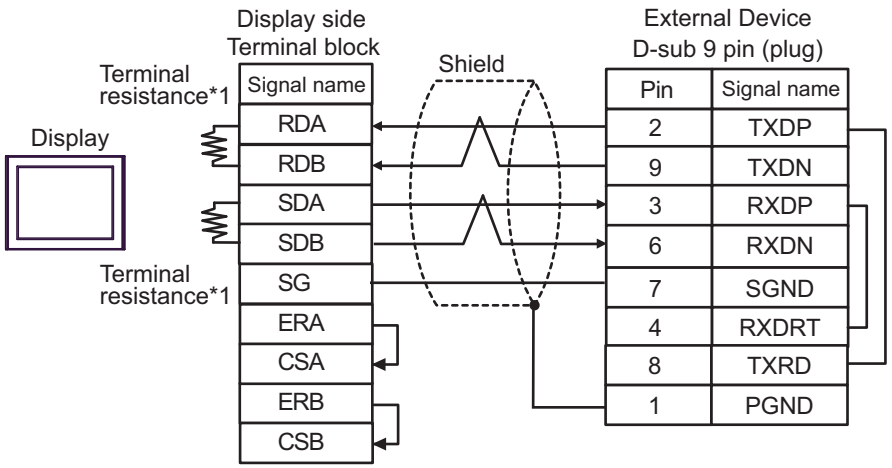

- 1:n Connection

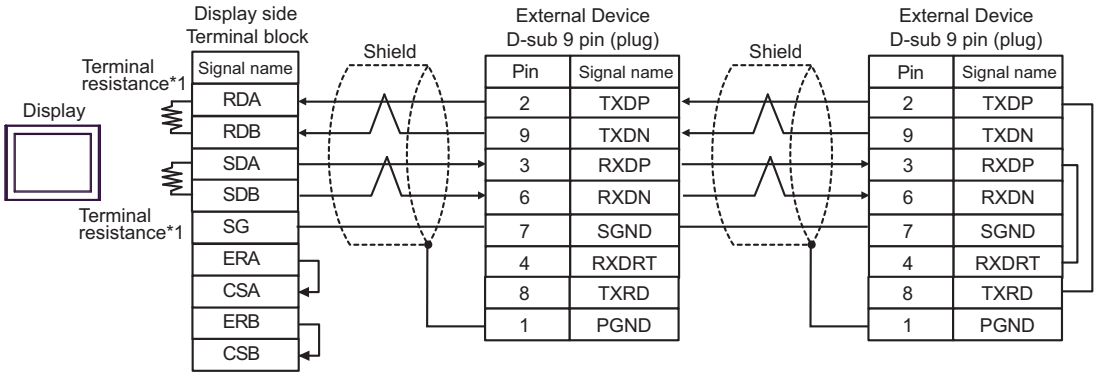

*1 The resistance in the Display is used as the termination resistance. Set the value of the DIP Switch on the rear of the Display as shown in the table below.

DIP Switch No.	Set Value
1	ON
2	ON
3	ON
4	ON

NOTE

- The cable length must be 500m or less.

11F)

- 1:1 Connection

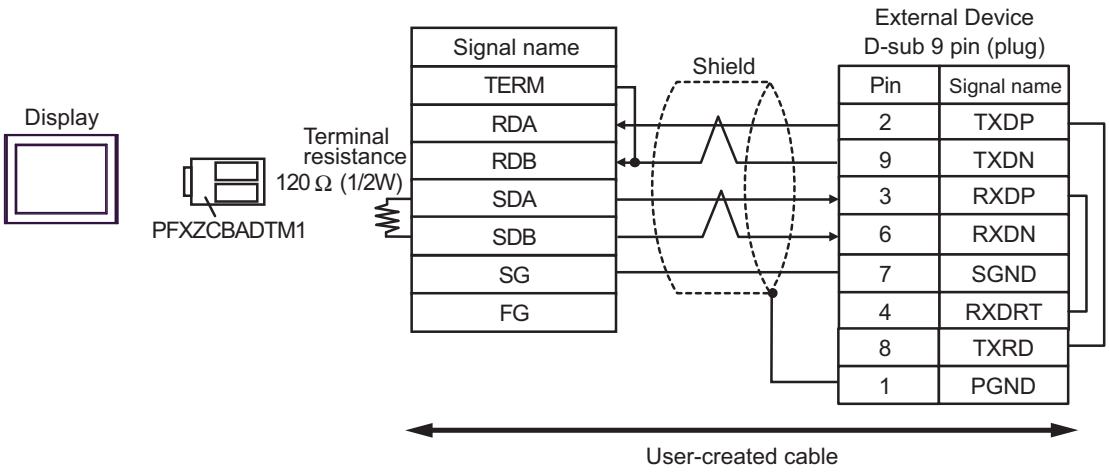

- 1:n Connection

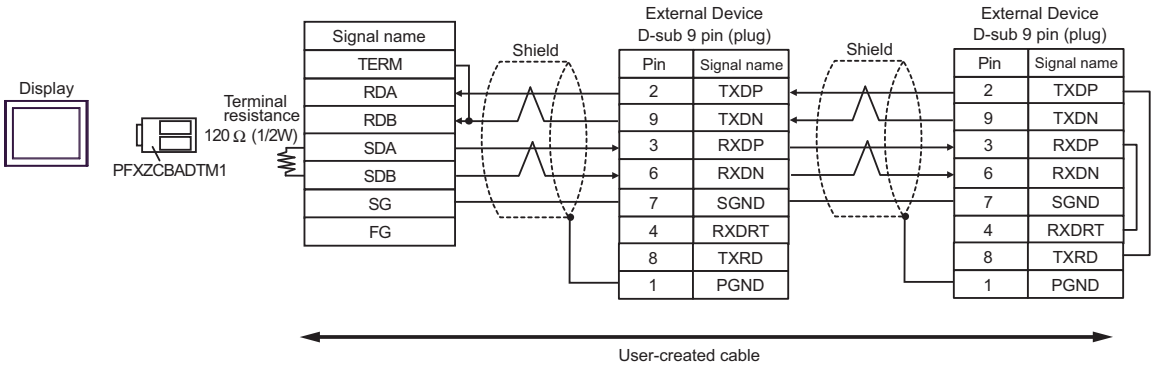

NOTE

- The cable length must be 500m or less.

11G)

- 1:1 Connection

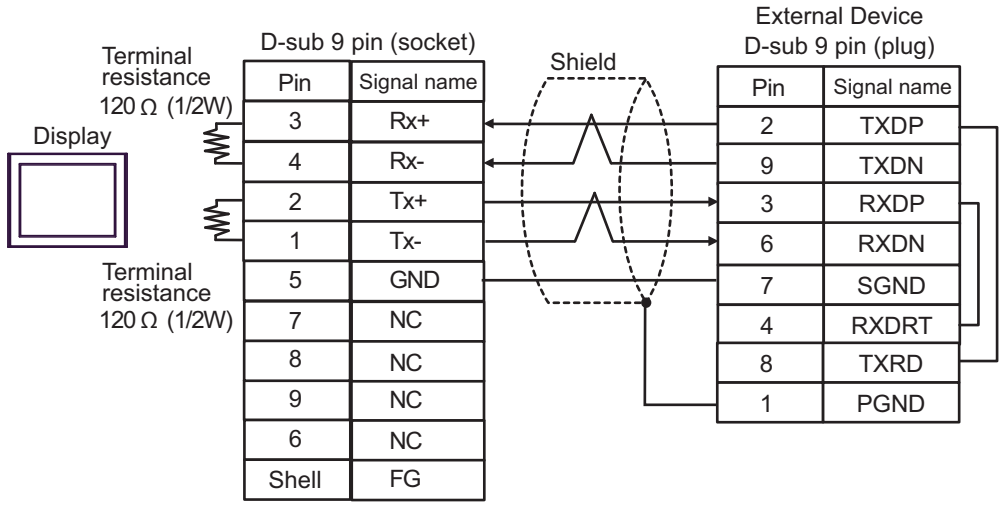

- 1:n Connection

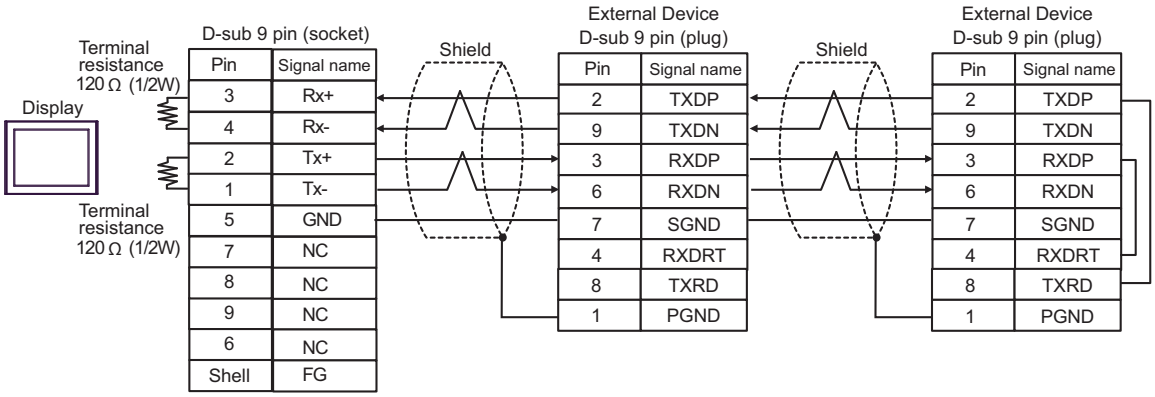

NOTE

- The cable length must be 500m or less.

5.12 Cable Diagram 12

Display (Connection Port)	Cable		Remarks
GP3000 (COM1) GP4000*1 (COM1) SP5000*2 (COM1/2) SP-5B00 (COM1) ST3000 (COM1) ST6000 (COM1) STM6000 (COM1) STC6000 (COM1) ET6000 (COM1) LT3000 (COM1) IPC*3 PC/AT	12A	User-created cable	The cable length must be 15m or less.
GP-4105 (COM1) GP-4115T (COM1) GP-4115T3 (COM1)	12B	User-created cable	The cable length must be 15m or less.

*1 All GP4000 models except GP-4100 series and GP-4203T

*2 Except SP-5B00

*3 Only the COM port which can communicate by RS-232C can be used.

■ IPC COM Port (page 7)

12A)

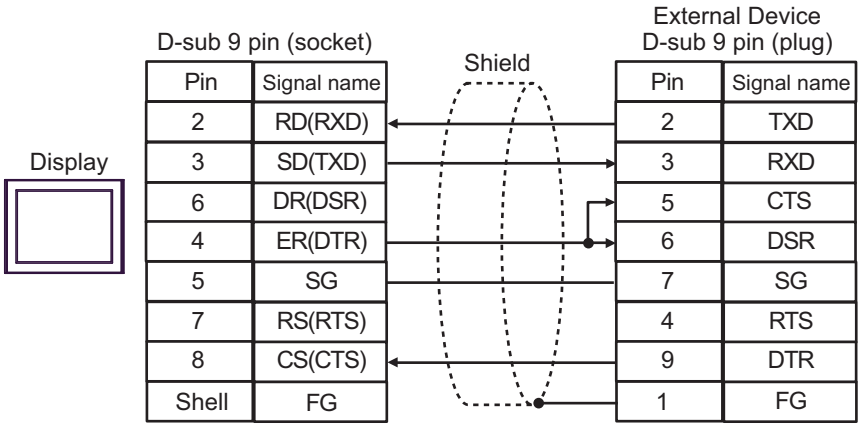

NOTE • The cable length must be 15m or less.

12B)

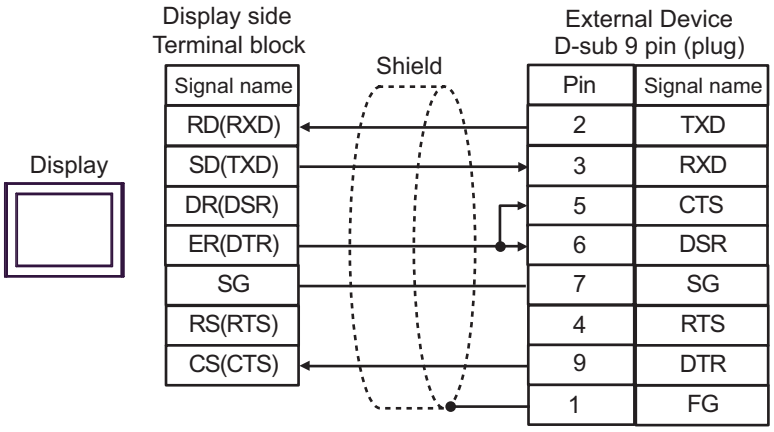

NOTE

- The cable length must be 15m or less.

5.13 Cable Diagram 13

Display (Connection Port)	Cable		Remarks
GP3000[*1] (COM1) AGP-3302B (COM2) GP-4*01TM (COM1) GP-Rear Module (COM1) ST3000[*2] (COM2) LT3000 (COM1) IPC[*3]	13A	COM Port Conversion Adapter by Pro-face CA3-ADPCOM-01 + Terminal Block Conversion Adapter by Pro-face CA3-ADPTRM-01 + User-created cable	The cable length must be 500 meters or less.
	13B	User-created cable	
GP3000[*4] (COM2)	13C	Online adapter by Pro-face CA4-ADPONL-01 + Terminal block conversion adapter by Pro-face CA3-ADPTRM-01 + User-created cable	The cable length must be 500 meters or less.
	13D	Online adapter by Pro-face CA4-ADPONL-01 + User-created cable	
GP-4106 (COM1) GP-4116T (COM1)	13E	User-created cable	The cable length must be 500 meters or less.
GP4000[*5] (COM2) GP-4201T (COM1) SP5000[*6] (COM1/2) SP-5B00 (COM2) ST6000[*7] (COM2) ST-6200 (COM1) STM6000 (COM1) STC6000 (COM1) ET6000[*8] (COM2) PS6000 (Basic Box) (COM1/2)	13F	RS-422 Terminal Block Conversion Adapter by Pro-face PFXZCBADTM1 [*9] + User-created cable	The cable length must be 500 meters or less.
	13B	User-created cable	
PE-4000B[*10] PS5000[*9] PS6000 (Optional Interface)[*9]	13G	User-created cable	The cable length must be 500 meters or less.

*1 All GP3000 models except AGP-3302B

*2 Except AST-3211A and AST-3302B

*3 Only the COM port which can communicate by RS-422/485 (4 wire) can be used. (Except PE-4000B, PS5000, and PS6000)

■ IPC COM Port (page 7)

*4 All GP3000 models except GP-3200 series and AGP-3302B

*5 All GP4000 models except GP-4100 series, GP-4*01TM, GP-Rear Module, GP-4201T and GP-4*03T

*6 Except SP-5B00

*7 Except ST-6200

*8 Due to the COM port specifications, flow control is not possible. Omit wiring the control pins on the Display side of the cable diagram.

*9 When using a Terminal Block Conversion Adapter (CA3-ADPTRM-01) instead of the RS-422 Terminal Block Conversion Adapter, refer to Cable Diagram 13A.

*10 Only the COM port which can communicate by RS-422/485 (4 wire) can be used.

■ IPC COM Port (page 7)

13A)

- 1:1 Connection

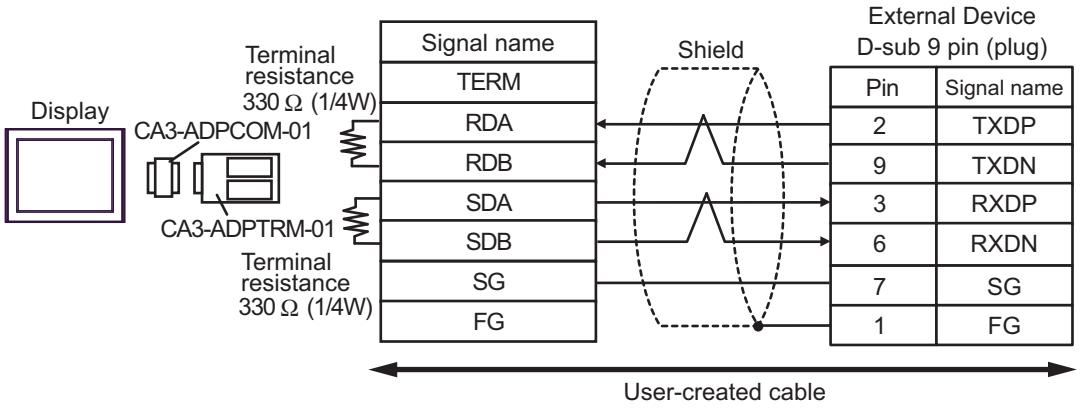

- 1:n Connection

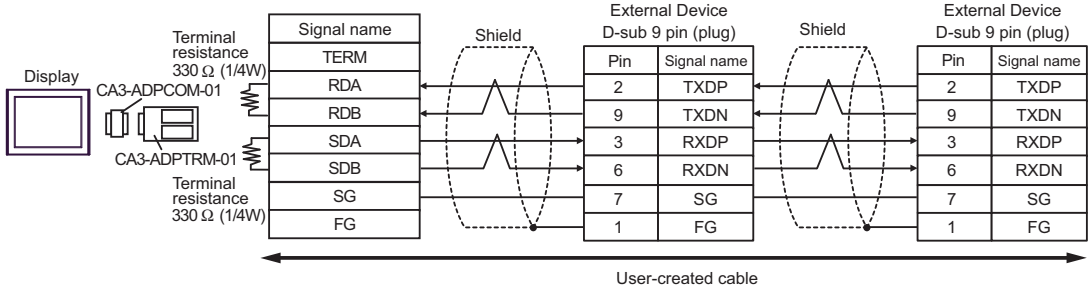

NOTE

- The cable length must be 500m or less.

13B)

- 1:1 Connection

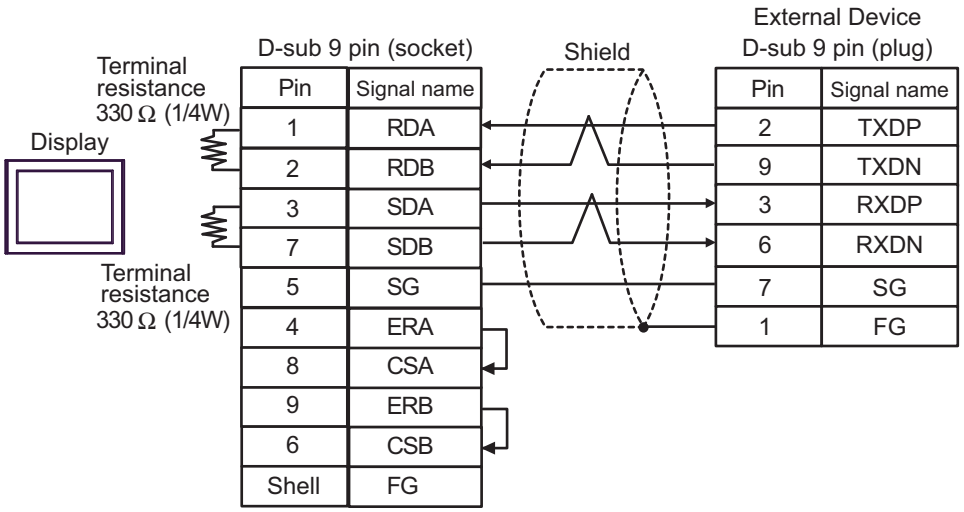

- 1:n Connection

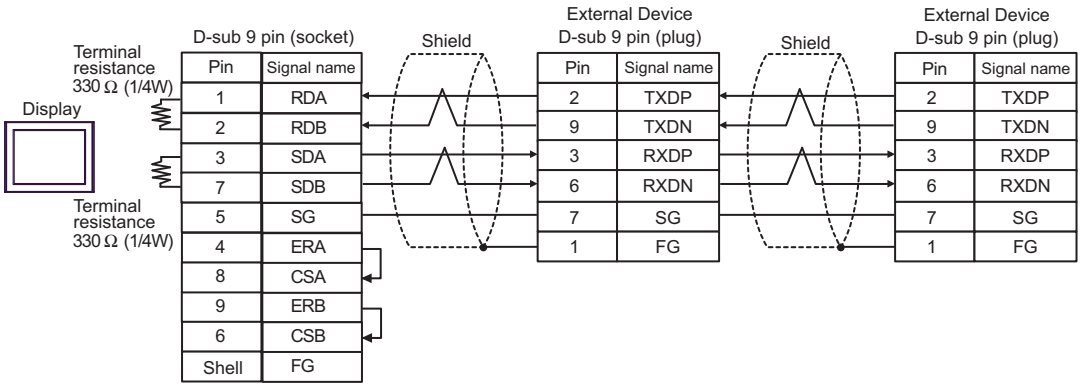

NOTE

- The cable length must be 500m or less.

13C)

- 1:1 Connection

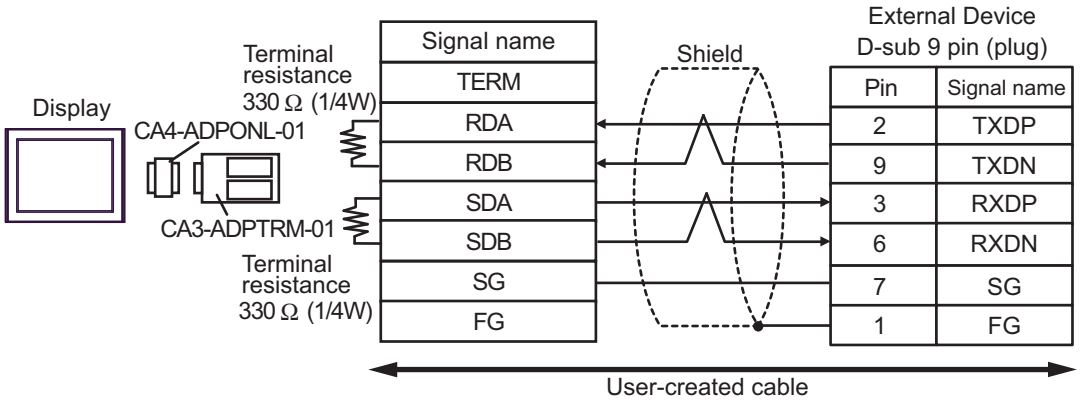

- 1:n Connection

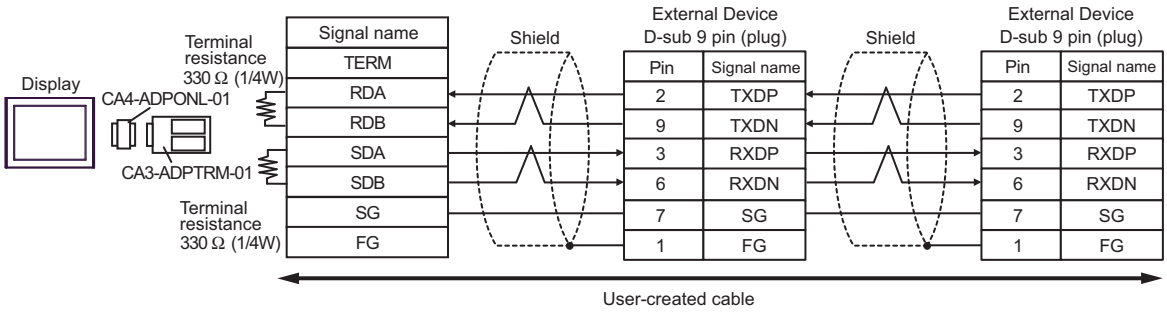

NOTE

- The cable length must be 500m or less.

13D)

- 1:1 Connection

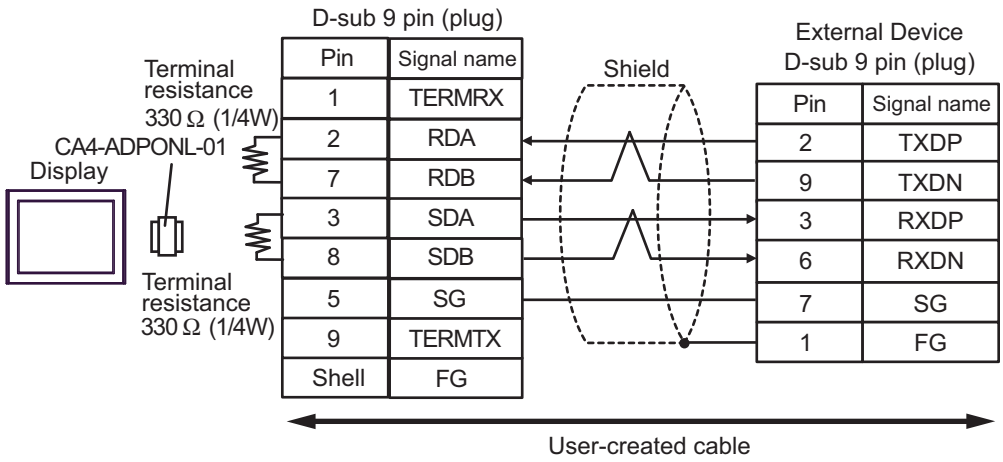

- 1:n Connection

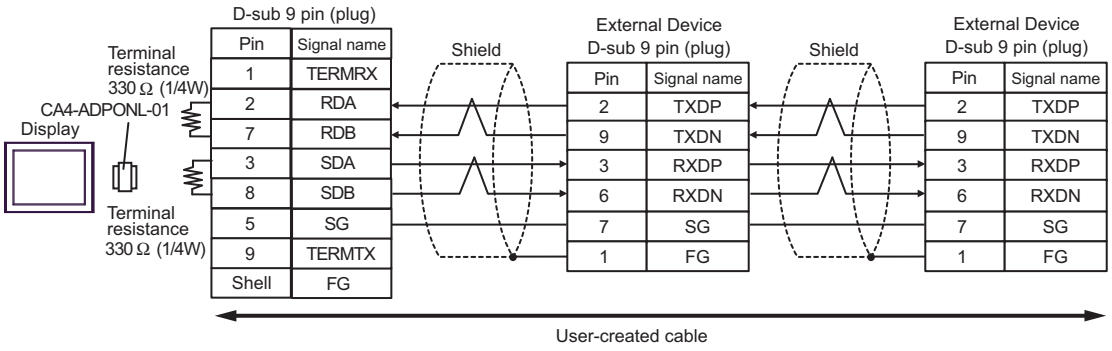

NOTE

- The cable length must be 500m or less.

13E)

- 1:1 Connection

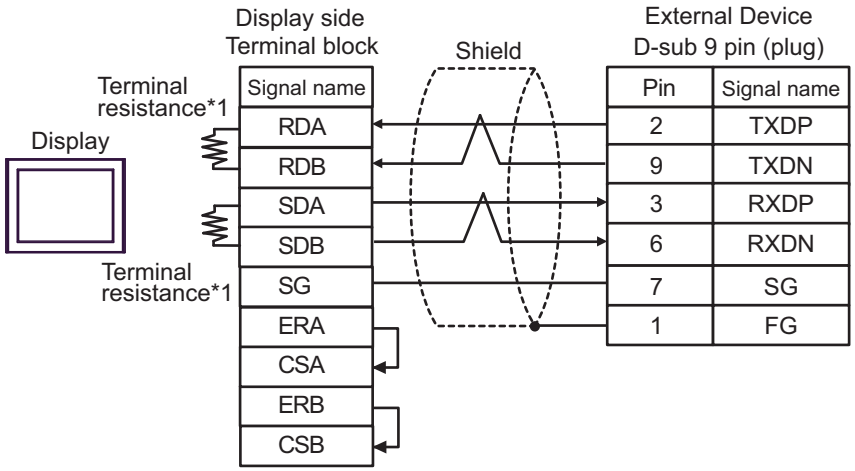

- 1:n Connection

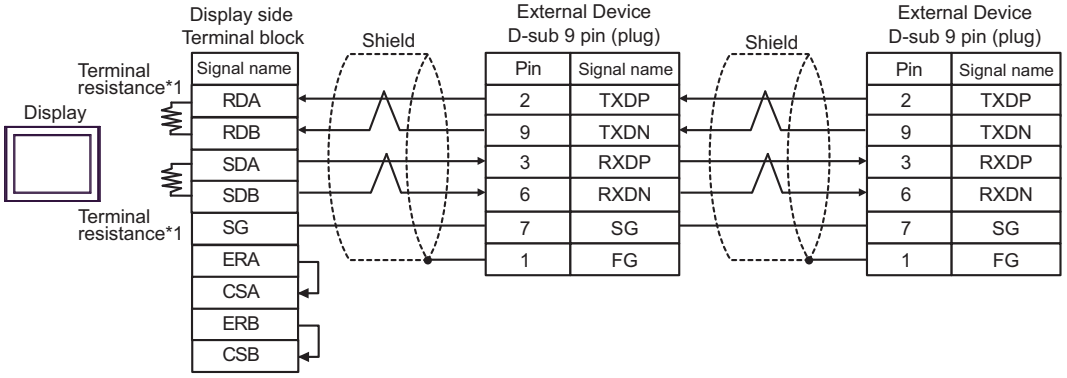

*1 The resistance in the Display is used as the termination resistance. Set the value of the DIP Switch on the rear of the Display as shown in the table below.

DIP Switch No.	Set Value
1	ON
2	OFF
3	ON
4	OFF

NOTE
- The cable length must be 500m or less.

13F)

- 1:1 Connection

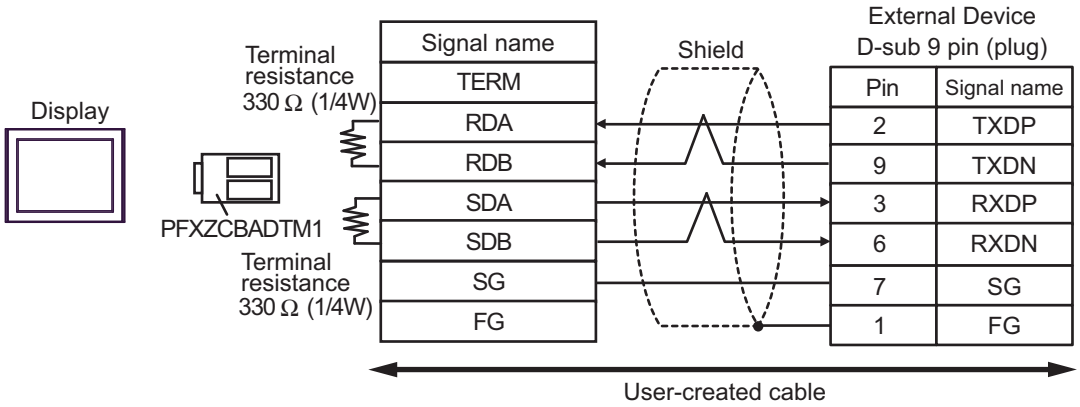

- 1:n Connection

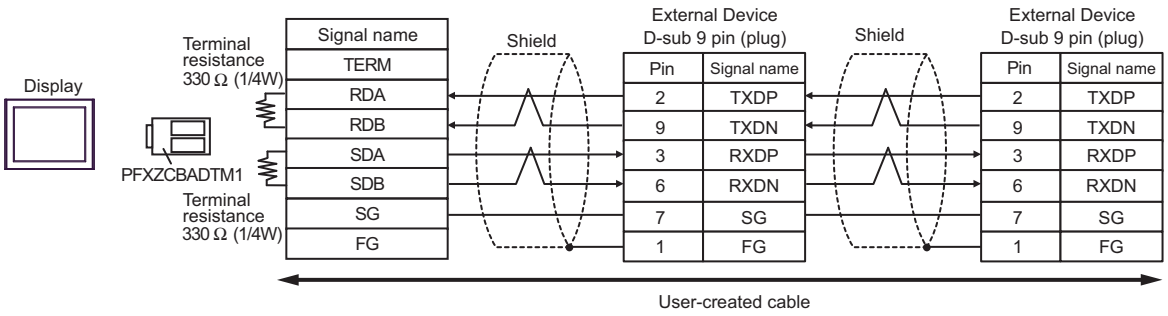

NOTE

- The cable length must be 500m or less.

13G)

- 1:1 Connection

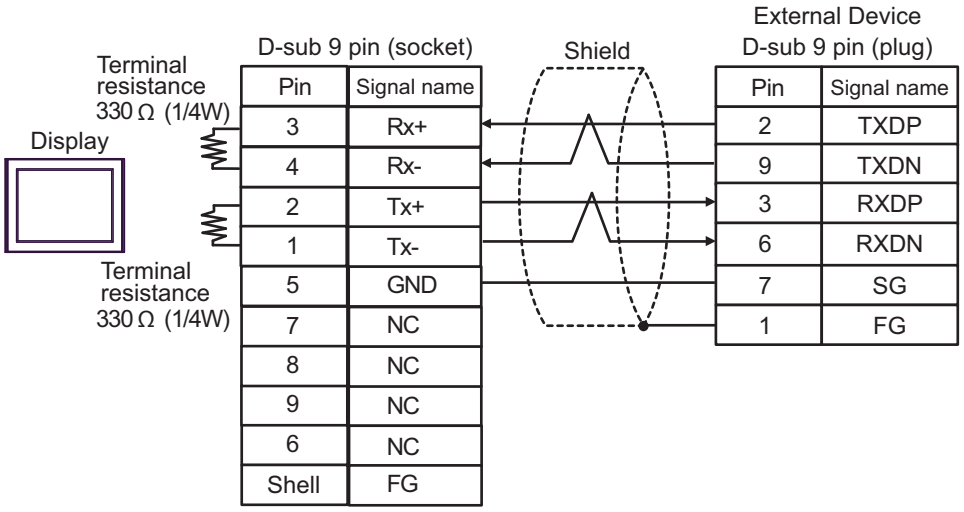

- 1:n Connection

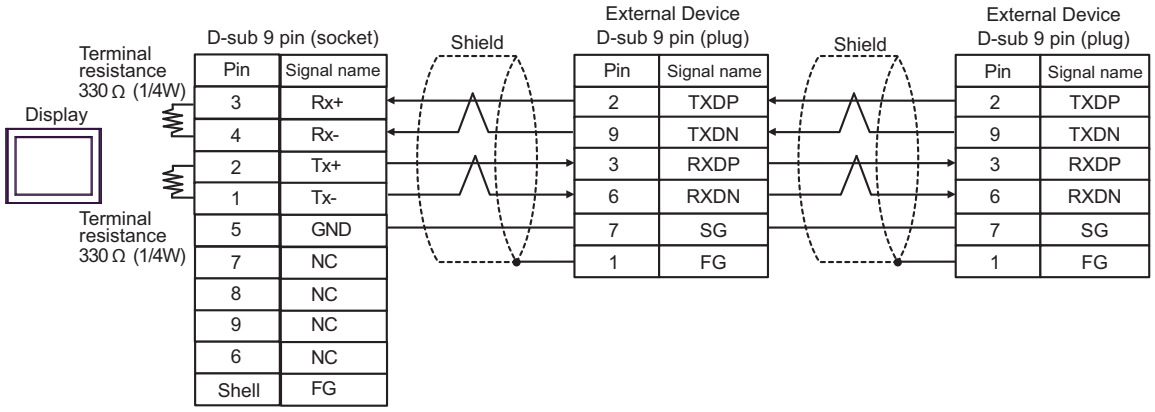

NOTE

- The cable length must be 500m or less.

5.14 Cable Diagram 14

Display (Connection Port)	Cable		Remarks
GP3000 (COM1) GP4000*1 (COM1) SP5000*2 (COM1/2) SP-5B00 (COM1) ST3000 (COM1) ST6000 (COM1) STM6000 (COM1) STC6000 (COM1) ET6000 (COM1) LT3000 (COM1) IPC*3 PC/AT	14A	User-created cable	The cable length must be 15m or less.
GP-4105 (COM1) GP-4115T (COM1) GP-4115T3 (COM1)	14B	User-created cable	The cable length must be 15m or less.

*1 All GP4000 models except GP-4100 series and GP-4203T

*2 Except SP-5B00

*3 Only the COM port which can communicate by RS-232C can be used.

■ IPC COM Port (page 7)

14A)

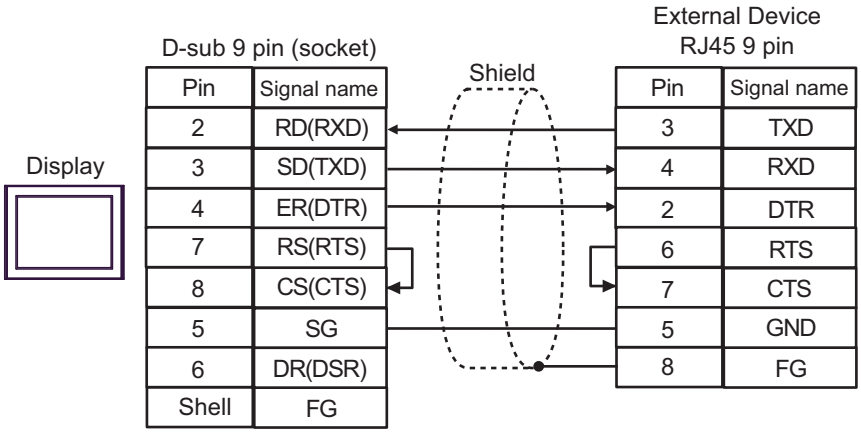

NOTE • The cable length must be 15m or less.

14B)

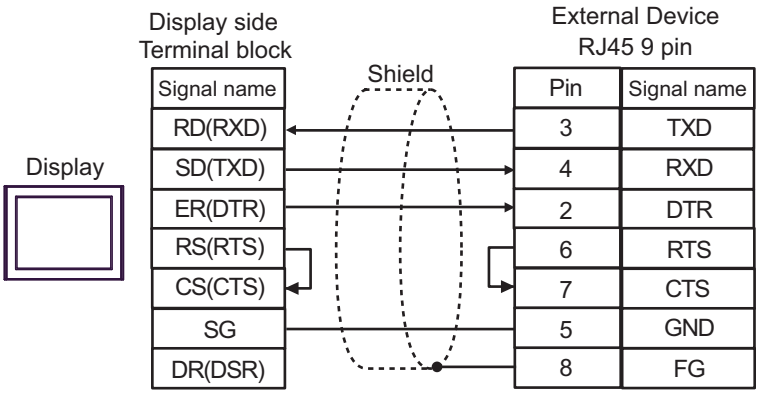

NOTE

- The cable length must be 15m or less.

6 Supported Device

Range of supported device address is shown in the table below. Please note that the actually supported range of the devices varies depending on the External Device to be used. Please check the actual range in the manual of your External Device.

6.1 MP900/2000/CP-9200SH

This address can be specified as system data area.

Device	Display on GP-Pro EX	Supported Address*1	32 bits	Remarks
Enhancing Coil (Bit device)	EGMB000000-EGMB65534F	MW000000 + Offset - MW65534F + Offset		*2
Enhancing Coil (Word device)	EGMB00000-EGMB65534	MW00000 + Offset - MW65534 + Offset		
Enhancing Input Relay (Bit device)	EGIB00000-EGIB7FFFF	IW00000 + Offset - IW7FFFF + Offset		*3
Enhancing Input Relay (Word device)	EGIB0000-EGIB7FFF	IW0000 + Offset - IW7FFF +Offset		*3
Coil (Bit device)	GMB0000.0-GMB4095.F	MW00000 + Offset - MW4095F + Offset	L/H	
Coil (Word device)	GMB0000-GMB4095	MW0000 + Offset - MW4095 + Offset		
Input Relay (Bit device)	GIB0000.0-GIB0FFF.F	IW00000 + Offset - IWOFFFF + Offset		*3
Input Relay (Word device)	GIB0000-GIB0FFFF	IW0000 + Offset - IW0FFFF + Offset		*3
Input Register	GIW0000-GIW7FFF	IW0000 + Offset - IW7FFFF + Offset		Bit F *3
Holding Register	GMW00000-GMW65534	MW00000 + Offset - MW65534 + Offset		Bit F

*1 When you specify "GMW00000" in GP-Pro EX, the address of "MW00000" to which offset value is added, is specified as the actual address in the External Device. Offset value is described as "Head REG" in the ladder software.

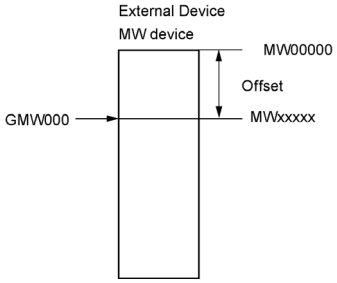

*2 When you write the bit address, the Display reads the word address corresponding to that of the External Device first. Then, it changes the target bit address among the word data once read and returns the word data to the External Device. Note that the correct data may not be written if you change the word address value in the ladder program while the Display reads the data of the External Device and returns it to the External Device.

*3 Write disable

NOTE

- Please refer to the GP-Pro EX Reference Manual for system data area.

  Cf. GP-Pro EX Reference Manual "LS Area (Direct Access Method Area)"

- Please refer to the precautions on manual notation for icons in the table.

  ☞"Manual Symbols and Terminology"

6.2 MEMOCON GL

This address can be specified as system data area.

Device	Bit Address	Word Address	32 bits	Remarks
Coil (Output/Internal)	000001-008192	000001-008177	H/L	16+1 *1
Input Relay	100001-101024	100001-101009		16+1 *2
Link Coil 1	D10001-D11024	D10001-D11009		16+1 *1
Link Coil 2	D20001-D21024	D20001-D21009		16+1 *1
MC Relay 1	X10001-X10256	X10001-X10241		16+1 *2
MC Relay 2	X20001-X20256	X20001-X20241		16+1 *2
MC Coil 1	Y10001-Y10256	Y10001-Y10241		16+1 *1
MC Coil 2	Y20001-Y20256	Y2001-Y20241		16+1 *1
MC Cord Relay 1	M10001-M10096	M10001-M10081		16+1 *2
MCCord Relay 2	M20001-M20096	M20001-M20081		16+1 *2
MC Control Relay 1	P10001-P10256	P10001-P10241		16+1 *2
MC Control Relay 2	P20001-P20256	P20001-P20241		16+1 *2
MC Control Coil 1	Q10001-Q10256	Q10001-Q10241		16+1 *1
MC Control Coil 2	Q20001-Q20256	Q20001-Q20241		16+1 *1
Input Register	-	300001-300512		Bit 15 *2
Holding Register	-	400001-409999		Bit 15
Link Register 1	-	R10001-R11024		Bit 15
Link Register 2	-	R20001-R21024		Bit 15
Constant Register	-	700001-704096		Bit 15

*1 When you write the bit address, the Display reads the word address corresponding to that of the External Device first. Then, it changes the target bit address among the word data once read and returns the word data to the External Device. Note that the correct data may not be read if you change the word address value in the ladder program while the Display reads the data of the External Device and returns it to the External Device.

*2 Write disable

NOTE

- Please refer to the GP-Pro EX Reference Manual for system data area.

  Cf. GP-Pro EX Reference Manual "LS Area (Direct Access Method Area)"

- Please refer to the precautions on manual notation for icons in the table.

  ☞"Manual Symbols and Terminology"

6.3 MEMOCON SC (U84/84J/U84S/GL40S/GL60H/GL70H/GL60S)

This address can be specified as system data area.

Device	Bit Address	Word Address	32 bits	Remarks
Coil (Output/Internal)	00001-08192	00001-08177	H/L	16+1 *1
Input Relay	10001-14096	10001-14081		16+1 *2
Link Coil	D0001-D1024	D0001-D1009		16+1 *1
Input Register	-	30001-30512		Bit 15 *2
Constant Register	-	31001-35096		Bit 15 *2
Output Register	-	40001-40512		Bit 15
Holding Register	-	40513-49999		Bit 15
Link Register	-	R0001-R1024		Bit 15
Extension Register	-	A0000-A7FFF		Bit F

*1 When you write the bit address, the Display reads the word address corresponding to that of the External Device first. Then, it changes the target bit address among the word data once read and returns the word data to the External Device. Note that the correct data may not be read if you change the word address value in the ladder program while the Display reads the data of the External Device and returns it to the External Device.

*2 Write disable

NOTE

- Please refer to the GP-Pro EX Reference Manual for system data area.

  Cf. GP-Pro EX Reference Manual "LS Area (Direct Access Method Area)"

- Please refer to the precautions on manual notation for icons in the table.

  ☞"Manual Symbols and Terminology"

6.4 Control Pack (CP-9200/CP-9200H)

This address can be specified as system data area.

Device	Bit Address	Register No of CP-9200/CP-9200H (equivalent to the address)	32 bits	Remarks
Input Register	00001-02048	IB00000-IB007FF	H/L	1 *1 *2
Output Register	02049-04096	OB00000-OB007FF		1 *1 *2
System Register	10001-12048	SB000000-SB00127F (S Register of CPU#0)		1 *1 *2 *3

Device	Word Address	Register No of CP-9200/CP-9200H (equivalent to the address)	32 bits	Remarks
Input Register	49744-49871	IB00000-IB007FF	H/L	Bit 15
Output Register	49872-49999	OB00000-OB007FF		Bit 15
System Register	30001-30256	SW00000-SW00255 (S Register of CPU#0)		Bit 15 *3
Data Register	31001-33048 (CP-9200H only)	DW00000-DW02047 (D Register of CPU#1)		Bit 15 *3
	40001-42048	DW00000-DW02047 (D Register of CPU#0)		Bit 15
Common Register	42049-49743	MW00000-MW07694		Bit 15

*1 When you write the bit address, the Display reads the word address corresponding to that of the External Device first. Then, it changes the target bit address among the word data once read and returns the word data to the External Device. Note that the correct data may not be read if you change the word address value in the ladder program while the Display reads the data of the External Device and returns it to the External Device.

*2 Specification using the word address is also available.

*3 Write disable

NOTE

- Please refer to the GP-Pro EX Reference Manual for system data area.

  Cf. GP-Pro EX Reference Manual "LS Area (Direct Access Method Area)"

- Please refer to the precautions on manual notation for icons in the table.

  ☞"Manual Symbols and Terminology"

6.5 MEMOCON Micro

This address can be specified as system data area.

Device	Bit Address	Word Address	32 bits	Remarks
Coil (Output/Internal)	00001-01531	-	H/L	16+1 *1 *2
Input Relay	10001-10511	-		16+1 *1 *2 *3
Input Register	-	30001-30047		Bit 15 *3
Output/Holding Register	-	40001-41871		Bit 15

*1 When you write the bit address, the Display reads the word address corresponding to that of the External Device first. Then, it changes the target bit address among the word data once read and returns the word data to the External Device. Note that the correct data may not be read if you change the word address value in the ladder program while the Display reads the data of the External Device and returns it to the External Device.

*2 Specification using the word address is also available.

*3 Write disable

NOTE

- Please refer to the GP-Pro EX Reference Manual for system data area.

  Cf. GP-Pro EX Reference Manual "LS Area (Direct Access Method Area)"

- Please refer to the precautions on manual notation for icons in the table.

  ☞"Manual Symbols and Terminology"

7 Device Code and Address Code

Use device code and address code when you select "Device Type & Address" for the address type in data displays.

7.1 MP900/2000/CP-9200SH

Device	Device Name	Device Code (HEX)	Address Code
Coil	GMB	0080	Word Address
Input Relay	GIB	0081	Word Address
Enhancing Coil	EGMB	0090	Word Address
Enhancing Input Relay	EGIB	0091	Word Address
Input Register	GIW	0001	Word Address
Holding Register	GMW	0000	Word Address

7.2 MEMOCON GL

Device	Device Name	Device Code (HEX)	Address Code
Coil (Output/Internal)	0	0080	Word Address - 1*1
		00A0	(Word Address -1) divided by 16*2
Input Relay	1	0081	Word Address - 1*1
		00A1	(Word Address -1) divided by 16*2
Link Coil	D	0082	Word Address - 1*1
		00A2	(Word Address -1) divided by 16*2
MC Relay	X	0083	Word Address - 1*1
		00A3	(Word Address -1) divided by 16*2
MC Coil	Y	0084	Word Address - 1*1
		00A4	(Word Address -1) divided by 16*2
MC Cord Relay	M	0085	Word Address - 1*1
		00A5	(Word Address -1) divided by 16*2
MC Control Relay	P	0086	Word Address - 1*1
		00A6	(Word Address -1) divided by 16*2
MC Control Coil	Q	0087	Word Address - 1*1
		00A7	(Word Address -1) divided by 16*2
Input Register	3	0001	Word Address - 1
Holding Register	4	0000	Word Address - 1
Link Register	R	0002	Word Address - 1
Constant Register	7	0003	Word Address - 1

*1 Device code and address code of the project created with the driver prior to V1.13.05. Reading and Writing for the continuous addresses that extend from one address range to another cannot be specified.

*2 Device code and address code of the project created with the driver V1.13.05 or later. Reading and Writing for the continuous addresses that extend from one address range to another can be specified.

7.3 MEMOCON SC (U84/84J/U84S/GL40S/GL60H/GL70H/GL60S)

Device	Device Name	Device Code (HEX)	Address Code
Coil (Output/Internal)	0	0080	Word Address - 1*1
		00A0	(Word Address -1) divided by 16*2
Input Relay	1	0081	Word Address - 1*1
		00A1	(Word Address -1) divided by 16*2
Link Coil	D	0082	Word Address - 1*1
		00A2	(Word Address -1) divided by 16*2
Input Register	3	0001	Word Address - 1
Constant Register	3	0001	Word Address - 1
Output Register	4	0000	Word Address - 1
Holding Register	4	0000	Word Address - 1
Link Register	R	0002	Word Address - 1
Extension Register	A	0004	Word Address

*1 Device code and address code of the project created with the driver prior to V1.13.05. Reading and Writing for the continuous addresses that extend from one address range to another cannot be specified.

*2 Device code and address code of the project created with the driver V1.13.05 or later. Reading and Writing for the continuous addresses that extend from one address range to another can be specified.

7.4 Control Pack (CP-9200/CP-9200H)

Device	Device Name	Device Code (HEX)	Address Code
Input Register	0	0080	Word Address - 1[*1]
		00A0	(Word Address -1) divided by 16[*2]
Output Register	0	0080	Word Address - 1[*1]
		00A0	(Word Address -1) divided by 16[*2]
System Register	1	0081	Word Address - 1[*1]
		00A1	(Word Address -1) divided by 16[*2]
Input Register	4	0000	Word Address - 1
Output Register	4	0000	Word Address - 1
System Register	3	0001	Word Address - 1
Data Register	3	0001	Word Address - 1
	4	0000	Word Address - 1
Common Register	4	0000	Word Address - 1

*1 Device code and address code of the project created with the driver prior to V1.13.05. Reading and Writing for the continuous addresses that extend from one address range to another cannot be specified.

*2 Device code and address code of the project created with the driver V1.13.05 or later. Reading and Writing for the continuous addresses that extend from one address range to another can be specified.

7.5 MEMOCON Micro

Device	Device Name	Device Code (HEX)	Address Code
Coil (Output/Internal)	0	0080	Word Address - 1*1
		00A0	(Word Address -1) divided by 16*2
Input Relay	1	0081	Word Address - 1*1
		00A1	(Word Address -1) divided by 16*2
Input Register	3	0001	Word Address - 1
Output/Holding Register	4	0000	Word Address - 1

*1 Device code and address code of the project created with the driver prior to V1.13.05. Reading and Writing for the continuous addresses that extend from one address range to another cannot be specified.

*2 Device code and address code of the project created with the driver V1.13.05 or later. Reading and Writing for the continuous addresses that extend from one address range to another can be specified.

8 Error Messages

Error messages are displayed on the screen of Display as follows: "No. : Device Name: Error Message(Error Occurrence Area)". Each description is shown below.

Item	Description
No.	Error No.
Device Name	Name of the External Device where error occurs. Device name is a title of the External Device set with GP-Pro EX.((Initial value[PLC1])
Error Message	Displays messages related to the error which occurs.
Error Occurrence Area	Displays IP address or device address of the External Device where error occurs, or error codes received from the External Device. **NOTE** • IP address is displayed such as "IP address(Decimal): MAC address(Hex)". • Device address is displayed such as "Address: Device address". • Received error codes are displayed such as "Decimal[Hex]".

Display Examples of Error Messages

"RHAA035: PLC1: Error has been responded for device write command (Error Code: 2[02H])"

NOTE

- Refer to your External Device manual for details on received error codes.
- Refer to "Display-related errors" in "Maintenance/Troubleshooting Guide" for details on the error messages common to the driver.