Modbus-IDA

MOD_GRS_28

4/2025

General MODBUS SIO Master Driver

1 General MODBUS SIO Master Driver 3
2 System Configuration 4
3 External Device Selection 12
4 Communication Setting 13
5 Setup Items 79
6 Cable Diagrams 91
7 Supported Device 278
8 Device Code and Address Code 299
9 Error Messages 300

IMPORTANT

- The below Displays are no longer sold nor maintained by Pro-face. To reduce unplanned downtime due to aged hardware and to maximize your cyber security environment we recommend replacing your devices with a new, successor model. For details, please visit our homepage for "Recommended Substitution". Discontinued from GP-Pro EX 5.00 onwards: GP3000 Series, LT3000 Series, ST3000 Series, GP-4100 Series (Monochrome model), PL Series, PS3000/4000 Series, PE4000 Series.
- For details on the Displays supported by the driver, please check the "Connectable Devices" on our website.
  http://www.pro-face.com/trans/en/manual/1064.html

Introduction

This manual describes how to connect the Display and the External Device (target PLC).

In this manual, the connection procedure will be described in the sections identified below.

1	System Configuration This section lists the types of External Devices and SIO that you can connect.	☞ "2 System Configuration" (page 4)
2	External Device Selection Select the model (series) of the External Device and its connection method.	☞ "3 External Device Selection" (page 12)
3	Communication Settings This section shows setting examples for communicating between the Display and the External Device.	☞ "4 Communication Setting" (page 13)
4	Setup Items This section describes communication setup items on the Display. Set the communication settings of the Display with GP-Pro EX or in offline mode.	☞ "5 Setup Items" (page 79)
5	Cable Diagrams This section shows cables and adapters used to connect the Display and the External Device.	☞ "6 Cable Diagrams" (page 91)

Operation

1 General MODBUS SIO Master Driver

The general MODBUS SIO Master Driver is used to connect the Display to a MODBUS-compatible External Device for general purpose.
The function code and boundary required for communication can be changed according to the External Device.
Up to 31 units of the External Device can be connected to the Display when one COM port of the Display is used.
Up to 32 units are available when two or more COM ports are used.

2 System Configuration

The system configuration in the case when the External Device and the Display are connected is shown.

Series	CPU	Link I/F	SIO Type	Setting Example	Cable Diagram
MODBUS Slave Device*1			RS-232C	Setting Example 1 (page 13)	Cable Diagram 1 (page 91)
			RS-422/485 (4 wire)	Setting Example 2 (page 15)	Cable Diagram 2 (page 97)
			RS-422/485 (2 wire)	Setting Example 3 (page 17)	Cable Diagram 3 (page 108)

*1 To connect with External Device using the Modbus protocol, configure the [Device Setting] to match the specifications on the External Device.
☞Setup Items (page 79)

- External Device used to confirm connection

Series	CPU	Link I/F	SIO Type	Setting Example	Cable Diagram
MICRO-EHV Series by Hitachi IES Co., Ltd.	MVH-A64□□ MVH-D64□□ MVH-A40□□ MVH-D40□□ MVL-A64□□ MVL-D64□□ MVL-A40□□ MVL-D40□□	Communication port on OBV-NES	RS-422/485 (2 wire)	Setting Example 4 (page 19)	Cable Diagram 4 (page 121)
MELSEC-FX Series by Mitsubishi Electric Corporation	FX3S-□□M□/□	FX3U-232ADP-MB + FX3S-CNV-ADP	RS-232C	Setting Example 5 (page 21)	Cable Diagram 5 (page 134)
		FX3U-485ADP-MB + FX3S-CNV-ADP	RS-422/485 (4 wire)	Setting Example 6 (page 23)	Cable Diagram 6 (page 136)
			RS-422/485 (2 wire)	Setting Example 7 (page 25)	Cable Diagram 7 (page 144)
MSEP-LC by IAI Corporation	MSEP-LC	SIO connector on MSEP-LC	RS-232C	Setting Example 8 (page 27)	Cable Diagram 8 (page 157)
RCON Series by IAI Corporation	RCON-PC-□ RCON-PCF-□ RCON-AC-□ RCON-DC-□ RCON-SC-□	SIO port on RCON-GW/GWG-□	RS-232C	Setting Example 9 (page 29)	Cable Diagram 8 (page 157)

Series	CPU	Link I/F	SIO Type	Setting Example	Cable Diagram
KV-7000 Series by KEYENCE Corporation	KV-7300	KV-XL402	RS-422/485 (4 wire)	Setting Example 10 (page 31)	Cable Diagram 9 (page 159)
KV-8000 Series by KEYENCE Corporation	KV-8000	KV-XL402	RS-422/485 (4 wire)	Setting Example 11 (page 33)	Cable Diagram 9 (page 159)
CP Series by OMRON Corporation	CP2E-N14DR-A CP2E-N14DT-A CP2E-N14DR-D CP2E-N14DT-D CP2E-N14DT1-D CP2E-N20DR-A CP2E-N20DT-A CP2E-N20DR-D CP2E-N20DT-D CP2E-N20DT1-D CP2E-N30DR-A CP2E-N30DT-A CP2E-N30DR-D CP2E-N30DT-D CP2E-N30DT1-D CP2E-N40DR-A CP2E-N40DT-A CP2E-N40DR-D CP2E-N40DT-D CP2E-N40DT1-D CP2E-N60DR-A CP2E-N60DT-A CP2E-N60DR-D CP2E-N60DT-D CP2E-N60DT1-D	CP1W-CIF11	RS-422/485 (4 wire)	Setting Example 12 (page 35)	Cable Diagram 10 (page 165)
		CP2W-CIFD2	RS-422/485 (2 wire)	Setting Example 13 (page 37)	Cable Diagram 11 (page 174)
		CP2W-CIFD2	RS-232C	Setting Example 14 (page 39)	Cable Diagram 12 (page 187)
	CP2E-S30DR-A CP2E-S30DT-D CP2E-S30DT1-D CP2E-S40DR-A CP2E-S40DT-D CP2E-S40DT1-D CP2E-S60DR-A CP2E-S60DT-D CP2E-S60DT1-D	Built-in RS-422/485 port	RS-422/485 (2 wire)	Setting Example 13 (page 37)	Cable Diagram 11 (page 174)
		Built-in RS-232C port	RS-232C	Setting Example 14 (page 39)	Cable Diagram 13 (page 189)

Series	CPU	Link I/F	SIO Type	Setting Example	Cable Diagram
FP0H Series by Panasonic Industrial Devices SUNX Co., Ltd.	AFP0HC32P AFP0HC32T AFP0HC32EP AFP0HC32ET	RS232C port of the control unit	RS-232C	Setting Example 15 (page 41)	Cable Diagram 14 (page 191)
		AFP0HCCS1	RS-232C	Setting Example 15 (page 41)	Cable Diagram 15 (page 193)
		AFP0HCCS2	RS-232C	Setting Example 15 (page 41)	Cable Diagram 16 (page 195)
		AFP0HCCS1M1	RS-232C	Setting Example 15 (page 41)	Cable Diagram 17 (page 198)
			RS-422/485 (2 wire)	Setting Example 16 (page 43)	Cable Diagram 18 (page 200)
		AFP0HCCM1	RS-422/485 (2 wire)	Setting Example 16 (page 43)	Cable Diagram 19 (page 213)
FREQROL FR-A800 Series by Mitsubishi Electric Corporation	FR-A820-□K FR-A840-□K FR-A842-□K FR-A846-□K	RS-485 terminal on the Inverter	RS-422/485 (4 wire)	Setting Example 17 (page 45)	Cable Diagram 20 (page 226)
			RS-422/485 (2 wire)	Setting Example 18 (page 47)	Cable Diagram 21 (page 235)
FREQROL FR-F800 Series by Mitsubishi Electric Corporation	FR-F820-□K FR-F840-□K FR-F842-□K FR-F846-□K	RS-485 terminal on the Inverter	RS-422/485 (4 wire)	Setting Example 17 (page 45)	Cable Diagram 20 (page 226)
			RS-422/485 (2 wire)	Setting Example 18 (page 47)	Cable Diagram 21 (page 235)
FREQROL A800Pluse Series by Mitsubishi Electric Corporation	FR-A820-□CRN FR-A840-□CRN FR-A842-□CRN FR-A820-□R2R FR-A840-□R2R FR-A842-□R2R	RS-485 terminal on the Inverter	RS-422/485 (4 wire)	Setting Example 17 (page 45)	Cable Diagram 20 (page 226)
			RS-422/485 (2 wire)	Setting Example 18 (page 47)	Cable Diagram 21 (page 235)
FREQROL FR-E800 Series by Mitsubishi Electric Corporation	FR-E820-0.4K-1 FR-E810□-□K-□□ FR-E820□-□K-□□ FR-E840□-□K-□□ FR-E860□-□K-□□	PU connector on the Inverter	RS-422/485 (4 wire)	Setting Example 19 (page 49)	Cable Diagram 22 (page 248)
ACD-13A Series by Shinko Technos Co.,Ltd.	ACD-13A-R/M, C5	Terminal of back panel	RS-422/485 (2 wire) ASCII	Setting Example 20 (page 51)	Cable Diagram 23 (page 252)
			RS-422/485 (2 wire) RTU	Setting Example 21 (page 53)	Cable Diagram 23 (page 252)

Series	CPU	Link I/F	SIO Type	Setting Example	Cable Diagram
ACR-13A Series by Shinko Technos Co.,Ltd.	ACR-13A-R/M, C5	Terminal of back panel	RS-422/485 (2 wire) ASCII	Setting Example 20 (page 51)	Cable Diagram 23 (page 252)
			RS-422/485 (2 wire) RTU	Setting Example 21 (page 53)	Cable Diagram 23 (page 252)
BC□2 Series by Shinko Technos Co.,Ltd.	BCD2R00-06	Terminal of back panel	RS-422/485 (2 wire) ASCII	Setting Example 22 (page 55)	Cable Diagram 23 (page 252)
			RS-422/485 (2 wire) RTU	Setting Example 23 (page 57)	Cable Diagram 23 (page 252)
	BCR2R00-06	Terminal of back panel	RS-422/485 (2 wire) ASCII	Setting Example 22 (page 55)	Cable Diagram 23 (page 252)
			RS-422/485 (2 wire) RTU	Setting Example 23 (page 57)	Cable Diagram 23 (page 252)
	BCS2R00-06	Terminal of back panel	RS-422/485 (2 wire) ASCII	Setting Example 24 (page 59)	Cable Diagram 23 (page 252)
			RS-422/485 (2 wire) RTU	Setting Example 25 (page 61)	Cable Diagram 23 (page 252)
PCA1 Series by Shinko Technos Co.,Ltd.	PCA1R00-200	Terminal of back panel	RS-422/485 (2 wire) ASCII	Setting Example 26 (page 63)	Cable Diagram 23 (page 252)
			RS-422/485 (2 wire) RTU	Setting Example 27 (page 65)	Cable Diagram 23 (page 252)
PCB1 Series by Shinko Technos Co.,Ltd.	PCB1R00-06	Terminal of back panel	RS-422/485 (2 wire) ASCII	Setting Example 28 (page 67)	Cable Diagram 23 (page 252)
			RS-422/485 (2 wire) RTU	Setting Example 29 (page 69)	Cable Diagram 23 (page 252)
QTC1-4 Series by Shinko Technos Co.,Ltd.	QTC1-4PT-RRRRMMMM-00	Terminal of back panel	RS-422/485 (2 wire) RTU	Setting Example 30 (page 71)	Cable Diagram 23 (page 252)
	QTC1-40T-RRRRMMMM-00	QTC1-4PT-RRRRMMMM-00	RS-422/485 (2 wire) RTU	Setting Example 31 (page 73)	Cable Diagram 23 (page 252)
		QMC1-C50-0	RS-422/485 (2 wire) RTU	Setting Example 32 (page 75)	Cable Diagram 24 (page 265)
QMC1 Series by Shinko Technos Co.,Ltd.	QMC1-C50-0	RJ45 port	RS-422/485 (2 wire) RTU	Setting Example 33 (page 77)	Cable Diagram 24 (page 265)

■ Connection Configuration

◆ 1:1 Connection

◆ 1: n Connection

- Using 1 port

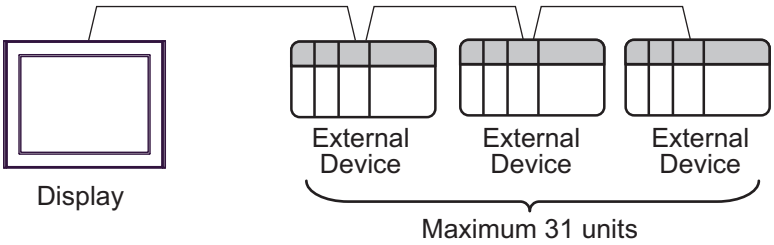

- Using 2 or more ports

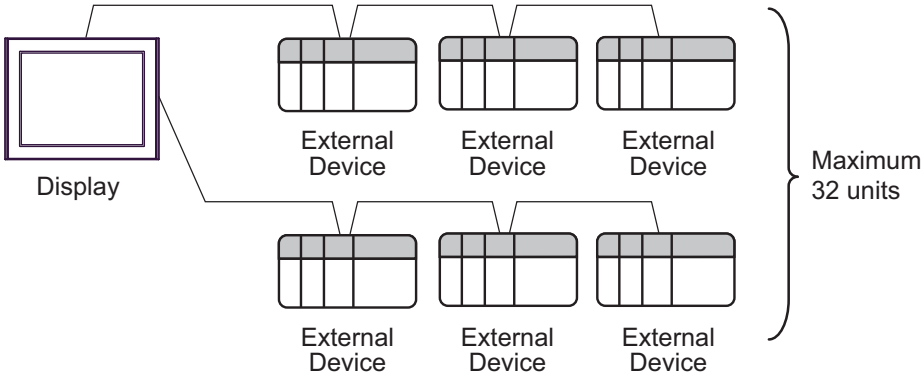

■ IPC COM Port

When connecting IPC with an External Device, the COM port used depends on the series and SIO type. Please refer to the IPC manual for details.

Usable port

Series	Usable Port		
	RS-232C	RS-422/485(4 wire)	RS-422/485(2 wire)
PS-2000B	COM1*1 , COM2, COM3*1, COM4	-	-
PS-3450A, PS-3451A, PS3000-BA, PS3001-BD	COM1, COM2*1*2	COM2*1*2	COM2*1*2
PS-3650A (T41 model), PS-3651A (T41 model)	COM1*1	-	-
PS-3650A (T42 model), PS-3651A (T42 model)	COM1*1*2, COM2	COM1*1*2	COM1*1*2
PS-3700A (Pentium®4-M) PS-3710A	COM1*1, COM2*1, COM3*2 , COM4	COM3*2	COM3*2
PS-3711A	COM1*1, COM2*2	COM2*2	COM2*2
PS4000*3	COM1, COM2	-	-
PL3000	COM1*1*2, COM2*1, COM3, COM4	COM1*1*2	COM1*1*2
PE-4000B Atom N270	COM1, COM2	-	-
PE-4000B Atom N2600	COM1, COM2	COM3*4 , COM4*4, COM5*4, COM6*4	COM3*4, COM4*4, COM5*4, COM6*4
PS5000 (Slim Panel Type Core i3 Model) *5 *6	COM1, COM2*4	COM2*4	COM2*4
PS5000 (Slim Panel Type Atom Model) *5 *6	COM1, COM2*7	COM2*7	COM2*7
PS5000 (Enclosed Panel Type)*8	COM1	-	-
PS5000 (Modular Type PFXPU/PFXPP)*5 *6 PS5000 (Modular Type PFXPL2B5-6)	COM1*7	COM1*7	COM1*7
PS5000 (Modular Type PFXPL2B1-4)	COM1, COM2*7	COM2*7	COM2*7
PS6000 (Advanced Box) PS6000 (Standard Box)	COM1*9	*10	*10
PS6000 (Basic Box)	COM1*9	COM1*9	COM1*9

*1 The RI/5V can be switched. Use the IPC's switch to change if necessary.

*2 Set up the SIO type with the DIP Switch. Please set up as follows according to SIO type to be used.

*3 When making communication between an External Device and COM port on the Expansion slot, only RS-232C is supported. However, ER (DTR/CTS) control cannot be executed because of the specification of COM port.
For connection with External Device, use user-created cables and disable Pin Nos. 1, 4, 6 and 9.
Please refer to the IPC manual for details of pin layout.

*4 Set up the SIO type with the BIOS. Please refer to the IPC manual for details of BIOS.

*5 When setting up communication between an External Device and the RS-232C/422/485 interface module, use the IPC (RS-232C) or PS5000 (RS-422/485) cable diagrams. However, when using PFXZPBMPR42P2 in a RS-422/485 (4-wire) configuration with no flow control, connect 7.RTS+ and 8.CTS+, and connect 6.RTS- and 9.CTS-.
When using RS-422/485 communication with External Devices, you may need to reduce the transmission speed and increase the TX Wait time.

*6 To use RS-422/485 communication on the RS-232C/422/485 interface module, the DIP Switch setting is required. Please refer to "Knowledge Base" (FAQs) on the support site. (http://www.pro-face.com/trans/en/manual/1001.html)

Settings	FAQ ID
PFXZPBMPR42P2, RS422/485 change method	FA263858
PFXZPBMPR42P2 termination resistor setting	FA263974
PFXZPBMPR44P2, RS422/485 change method	FA264087
PFXZPBMPR44P2 termination resistor setting	FA264088

*7 Set up the SIO type with the DIP Switch. Please refer to the IPC manual for details of DIP Switch. The BOX Atom has not a switch to set the RS-232C, RS-422/485 mode. Use the BIOS for the setting.

*8 For the connection with the External Device, on the user-created cable read as if the connector on the Display-side is a M12 A-coding 8 pin socket. The pin assignment is the same as described in the cable diagram. For the M12 A-coding connector, use PFXZPSCNM122.

*9 In addition to COM1, you can also use the COM port on the optional interface.

*10 Install the optional interface in the expansion slot.

DIP Switch settings (PL3000 / PS3000 Series)

RS-232C

DIP Switch	Setting	Description
1	OFF*1	Reserved (always OFF)
2	OFF	SIO type: RS-232C
3	OFF	
4	OFF	Output mode of SD (TXD) data: Always output
5	OFF	Terminal resistance (220Ω) insertion to SD (TXD): None
6	OFF	Terminal resistance (220Ω) insertion to RD (RXD): None
7	OFF	Short-circuit of SDA (TXA) and RDA (RXA): Not available
8	OFF	Short-circuit of SDB (TXB) and RDB (RXB): Not available
9	OFF	RS (RTS) Auto control mode: Disabled
10	OFF	

*1 When using PS-3450A, PS-3451A, PS3000-BA and PS3001-BD, turn ON the set value.

RS-422/485 (4 wire)

DIP Switch	Setting	Description
1	OFF	Reserved (always OFF)
2	ON	SIO type: RS-422/485
3	ON	
4	OFF	Output mode of SD (TXD) data: Always output
5	OFF	Terminal resistance (220Ω) insertion to SD (TXD): None
6	OFF	Terminal resistance (220Ω) insertion to RD (RXD): None
7	OFF	Short-circuit of SDA (TXA) and RDA (RXA): Not available
8	OFF	Short-circuit of SDB (TXB) and RDB (RXB): Not available
9	OFF	RS (RTS) Auto control mode: Disabled
10	OFF	

RS-422/485 (2 wire)

DIP Switch	Setting	Description
1	OFF	Reserved (always OFF)
2	ON	SIO type: RS-422/485
3	ON	
4	OFF	Output mode of SD (TXD) data: Always output
5	OFF	Terminal resistance (220Ω) insertion to SD (TXD): None
6	OFF	Terminal resistance (220Ω) insertion to RD (RXD): None
7	ON	Short-circuit of SDA (TXA) and RDA (RXA): Available
8	ON	Short-circuit of SDB (TXB) and RDB (RXB): Available
9	ON	RS (RTS) Auto control mode: Enabled
10	ON	

3 External Device Selection

Select the External Device to be connected to the Display.

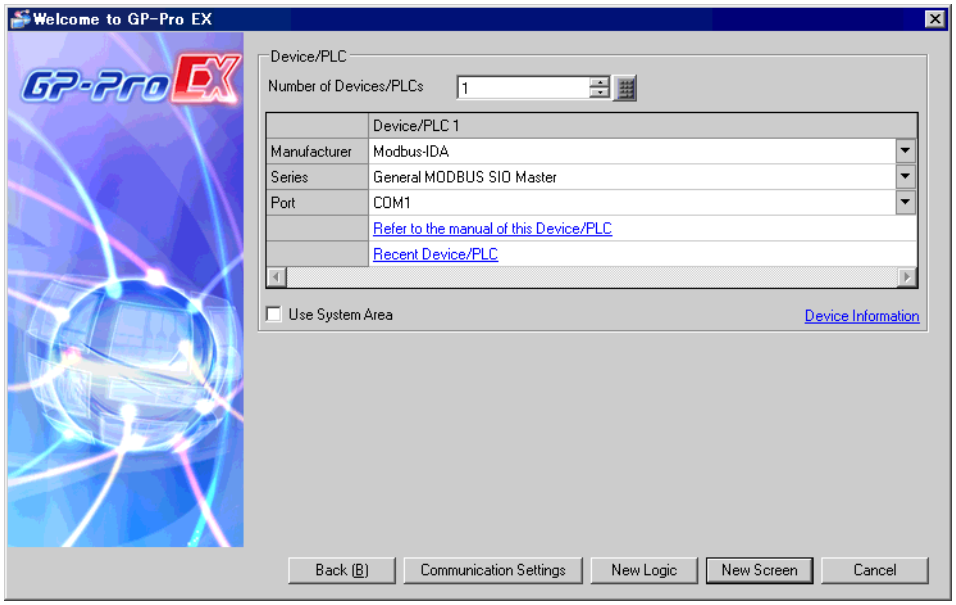

Setup Items	Setup Description
Number of Devices/ PLCs	Use an integer from 1 to 4 to enter the number of Devices/PLCs to connect to the display.
Manufacturer	Select the manufacturer of the External Device to be connected. Select "Modbus-IDA".
Series	Select a model (series) of the External Device to be connected and connection method. Select "General MODBUS SIO Master". In System configuration, check to make sure the external device to which you are connecting is supported in "General MODBUS SIO Master". ☞ "2 System Configuration" (page 4)
Port	Select the Display port to be connected to the External Device.
Use System Area	Check this option to synchronize the system data area of the Display and the device (memory) of the External Device. When synchronized, you can use the External Device's ladder program to switch the display or display the window on the Display. Cf. GP-Pro EX Reference Manual "LS Area (Direct Access Method Area)" This feature can also be set in GP-Pro EX or in the Display's offline mode. Cf. GP-Pro EX Reference Manual "System Settings [Display Unit] - [System Area] Settings Guide" Cf. Maintenance/Troubleshooting Guide "Main Unit - System Area Settings"

4 Communication Setting

Examples of communication settings of the Display and the External Device, recommended by Pro-face, are shown.

4.1 Setting Example 1

■ GP-Pro EX Settings

◆ Communication Settings

To display the setup screen, from the [Project] menu, point to [System Settings] and select [Device/PLC].

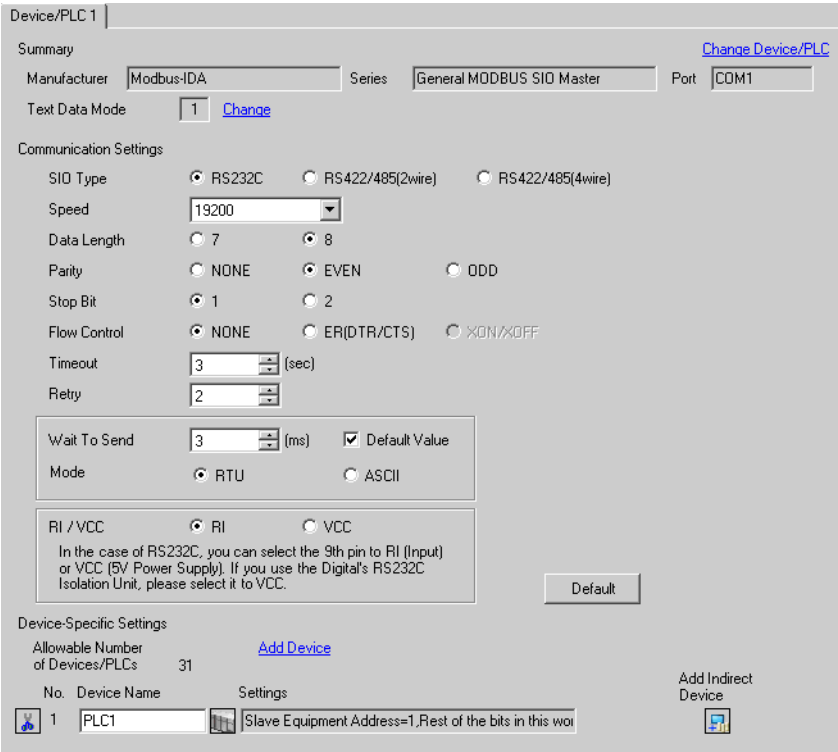

NOTE

- Select "NONE" or "ER (DTR/CTS)" for the flow control according to the cable to use.

◆ Device Setting

To display the [Individual Device Settings] dialog box, from [Device-Specific Settings] in the [Device/PLC] window, select the external device and click [Settings] .

To connect multiple External Devices, from [Device-Specific Settings] in the [Device/PLC] window, click [Add Device] to add another External Device.

[Equipment Configuration] Tab

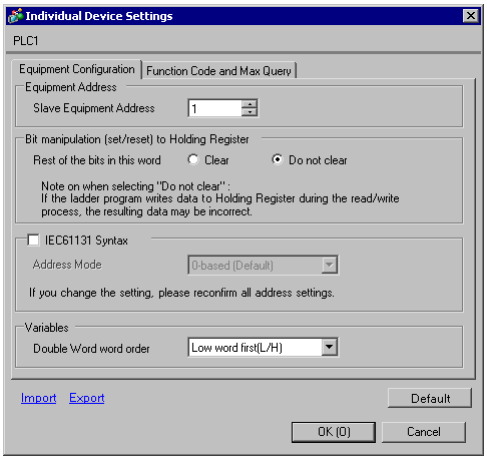

[Function Code and Max Query] Tab

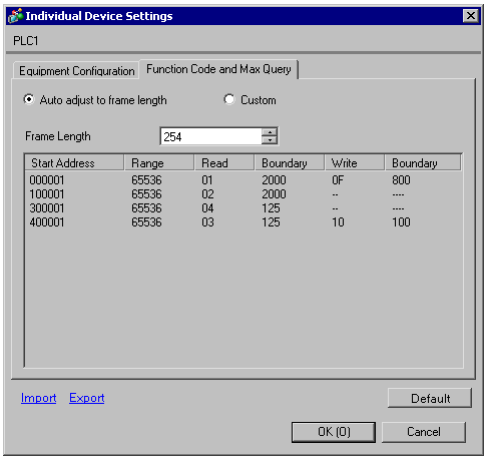

■ External Device Settings

External Device settings vary depending on the device. Refer to your External Device manual for details.

4.2 Setting Example 2

■ GP-Pro EX Settings

◆ Communication Settings

To display the setup screen, from the [Project] menu, point to [System Settings] and select [Device/PLC].

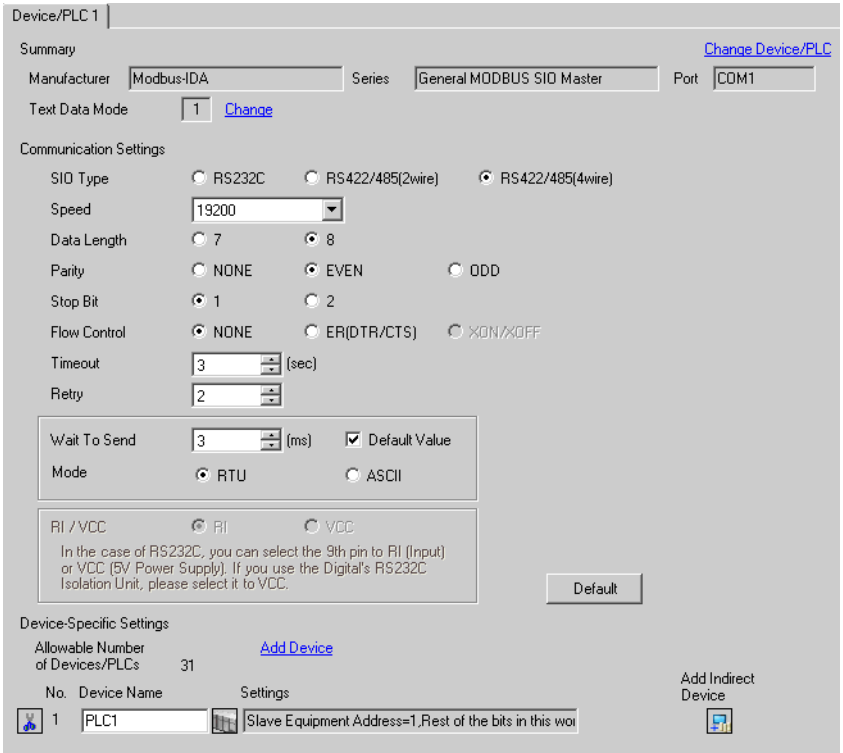

◆ Device Setting

To display the [Individual Device Settings] dialog box, from [Device-Specific Settings] in the [Device/PLC] window, select the external device and click [Settings] .

To connect multiple External Devices, from [Device-Specific Settings] in the [Device/PLC] window, click [Add Device] to add another External Device.

[Equipment Configuration] Tab

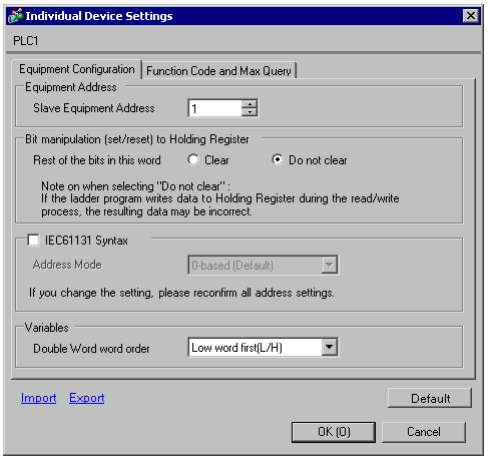

[Function Code and Max Query] Tab

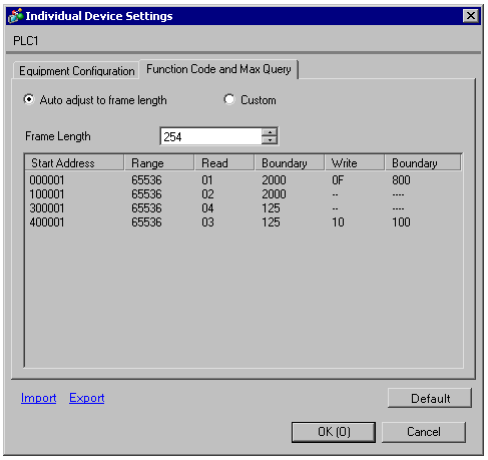

■ External Device Settings

External Device settings vary depending on the device. Refer to your External Device manual for details.

4.3 Setting Example 3

■ GP-Pro EX Settings

◆ Communication Settings

To display the setup screen, from the [Project] menu, point to [System Settings] and select [Device/PLC].

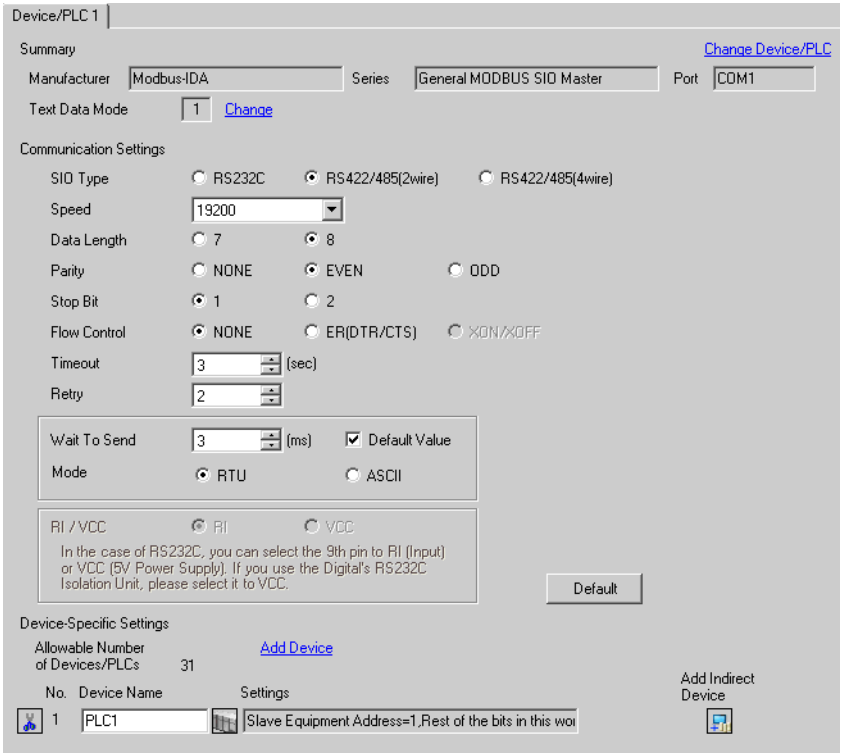

◆ Device Setting

To display the [Individual Device Settings] dialog box, from [Device-Specific Settings] in the [Device/PLC] window, select the external device and click [Settings] .

To connect multiple External Devices, from [Device-Specific Settings] in the [Device/PLC] window, click [Add Device] to add another External Device.

[Equipment Configuration] Tab

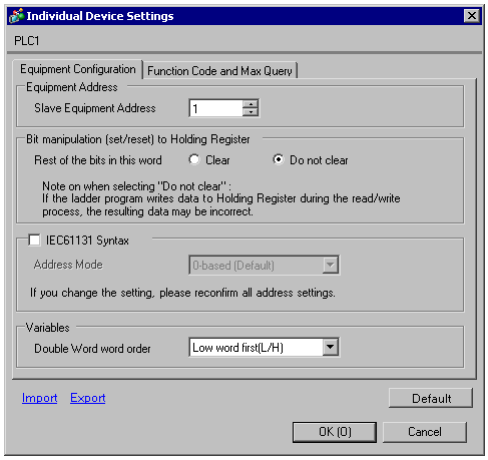

[Function Code and Max Query] Tab

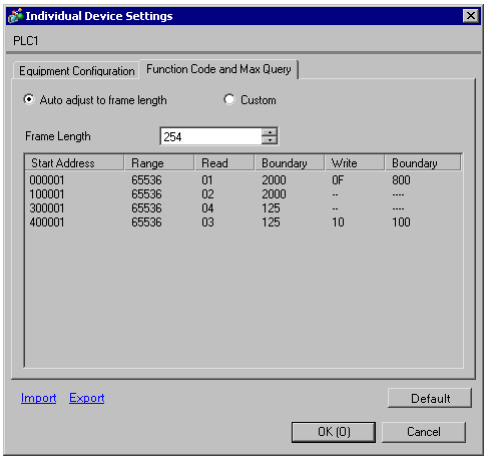

■ External Device Settings

External Device settings vary depending on the device. Refer to your External Device manual for details.

4.4 Setting Example 4

■ GP-Pro EX Settings

◆ Communication Settings

To display the setup screen, from the [Project] menu, point to [System Settings] and select [Device/PLC].

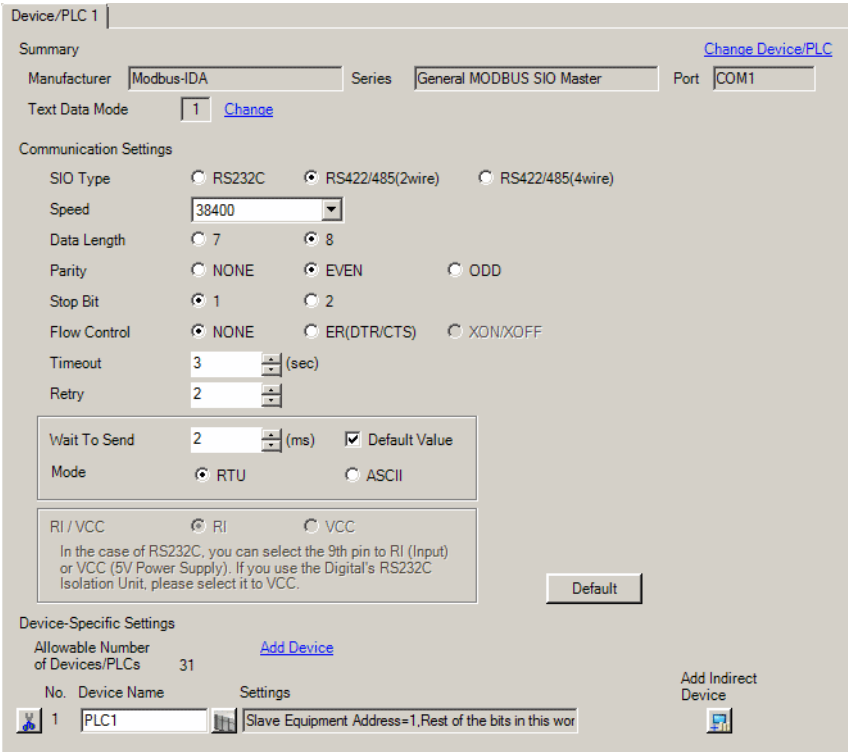

◆ Device Setting

To display the [Individual Device Settings] dialog box, from [Device-Specific Settings] in the [Device/PLC] window, select the external device and click [Settings] .

To connect multiple External Devices, from [Device-Specific Settings] in the [Device/PLC] window, click [Add Device] to add another External Device.

[Equipment Configuration] Tab

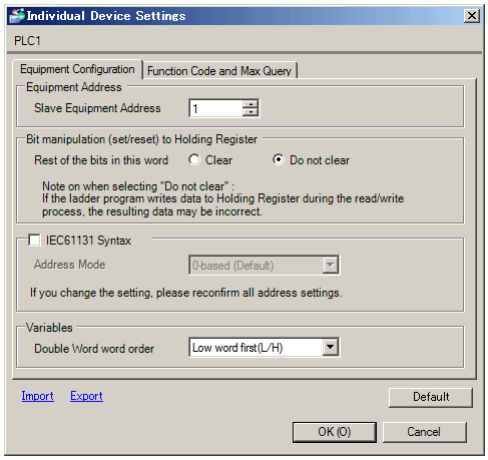

[Function Code and Max Query] Tab

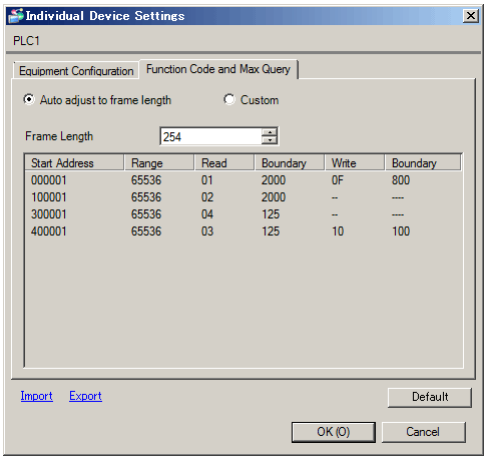

■ External Device Settings (serial communication port on standard unit)

Use the programming software (Control Editor) for communication settings. Please refer to the manual of the External Device for more details.

◆ Procedure

1. Start the programming software and create the project. The project appears in offline mode.
2. In the tree view, from the [CPU Parameters] double-click [Option board settings]. The [Option board settings] dialog box appears.
3. Define the settings in the [RS-485 communication] tab as follows, and click [OK].

Setup Items	Setting	Remarks
Purpose	Modbus Slave	
Baudrate	38.4kbps	Select the communication speed from one of the following.: 4.8kbps, 9.6kbps, 19.2kbps, 38.4kbps, 57.6kbps, 115.2kbps
Station No.	1	
Format	8-E-1	Data length: 8-bit, None parity, Stop bit: 1-bit
Analog input filter	1	

4. Enter online mode, and transfer the settings to the External Device.
5. Restart the External Device.

4.5 Setting Example 5

■ GP-Pro EX Settings

◆ Communication Settings

To display the setup screen, from the [Project] menu, point to [System Settings] and select [Device/PLC].

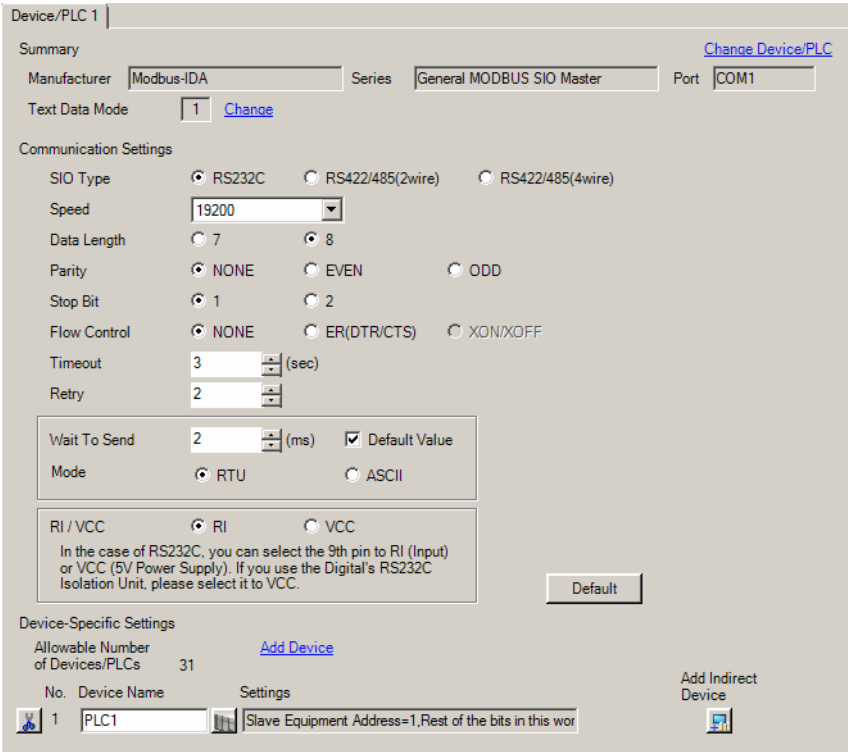

◆ Device Setting

To display the [Individual Device Settings] dialog box, from [Device-Specific Settings] in the [Device/PLC] window, select the external device and click [Settings] .

To connect multiple External Devices, from [Device-Specific Settings] in the [Device/PLC] window, click [Add Device] to add another External Device.

[Equipment Configuration] Tab

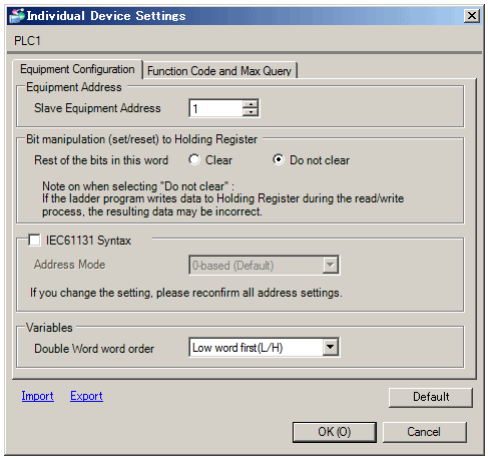

[Function Code and Max Query] Tab

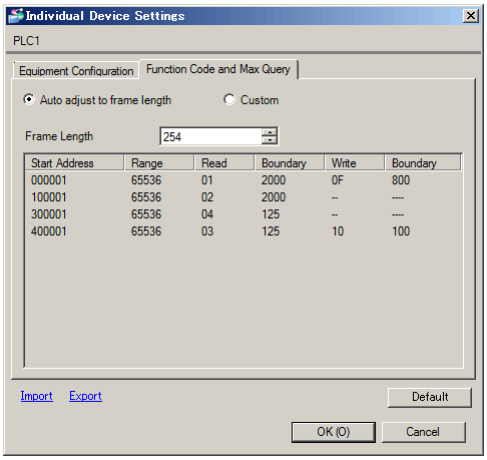

■ External Device Settings

Use the ladder software (GX Works2) for communication settings. Write the data to the following special data register in the ladder software.

After setting the data, turn the External Device off then back on. Please refer to the manual of the External Device for more details.

Special Data Register	Setting	Remarks
D8400	0x99	Communication Format Data length: 8-bit, None parity, Stop bit: 1-bit, Baud rate (bps): 19200, H/W type: RS232C
D8401	0x11	Protocol Protocol Selection: MODBUS serial line, Master/slave setting: MODBUS Slave, RTU/ASCII mode setting: RTU
D8411	0x02	Message to Message Delay
D8414	0x01	Slave Node Address

4.6 Setting Example 6

■ GP-Pro EX Settings

◆ Communication Settings

To display the setup screen, from the [Project] menu, point to [System Settings] and select [Device/PLC].

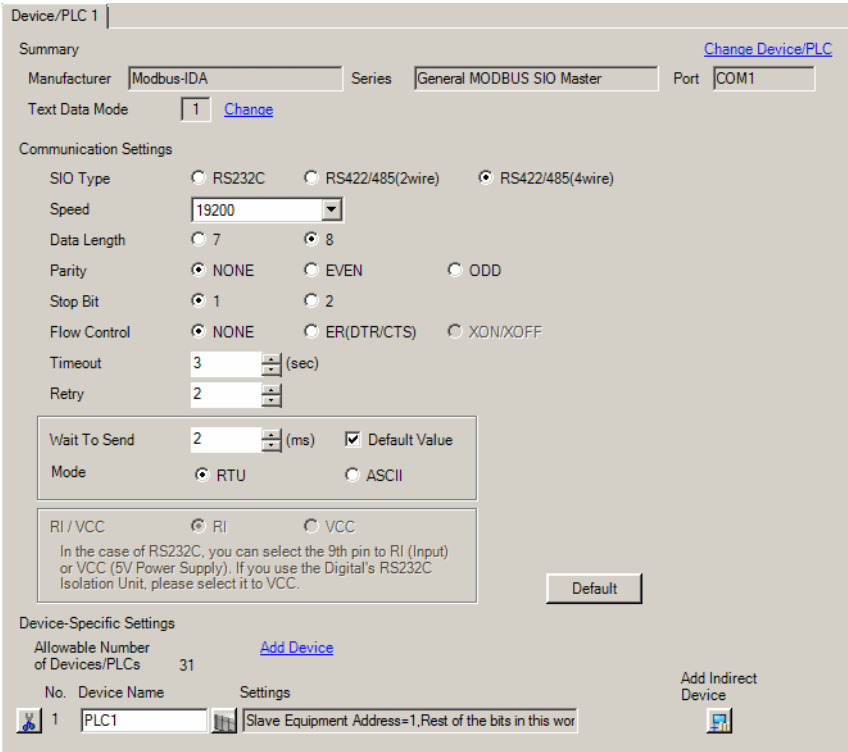

◆ Device Setting

To display the [Individual Device Settings] dialog box, from [Device-Specific Settings] in the [Device/PLC] window, select the external device and click [Settings] .

To connect multiple External Devices, from [Device-Specific Settings] in the [Device/PLC] window, click [Add Device] to add another External Device.

[Equipment Configuration] Tab

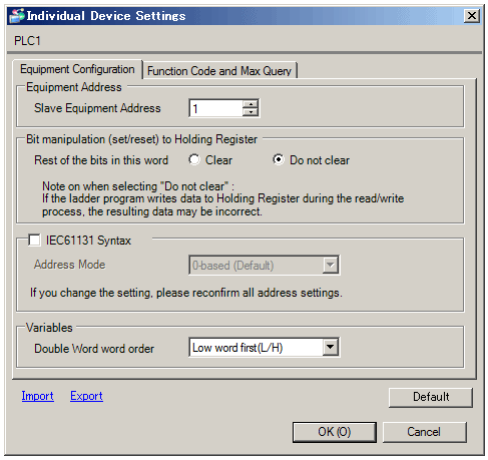

[Function Code and Max Query] Tab

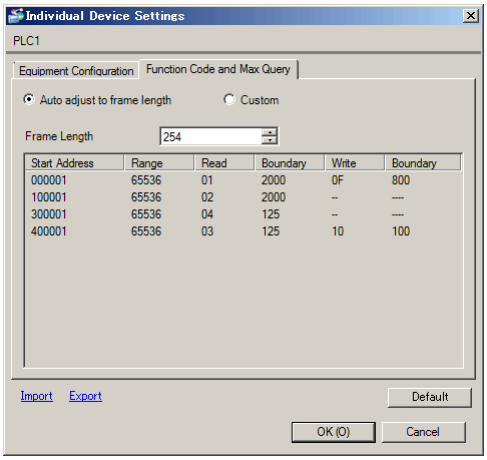

■ External Device Settings

Use the ladder software (GX Works2) for communication settings. Write the data to the following special data register in the ladder software.

After setting the data, turn the External Device off then back on. Please refer to the manual of the External Device for more details.

Special Data Register	Setting	Remarks
D8400	0x1099	Communication Format Data length: 8-bit, None parity, Stop bit: 1-bit, Baud rate (bps): 19200, H/W type: RS485
D8401	0x11	Protocol Protocol Selection: MODBUS serial line, Master/slave setting: MODBUS Slave, RTU/ASCII mode setting: RTU
D8411	0x02	Message to Message Delay
D8414	0x01	Slave Node Address

4.7 Setting Example 7

■ GP-Pro EX Settings

◆ Communication Settings

To display the setup screen, from the [Project] menu, point to [System Settings] and select [Device/PLC].

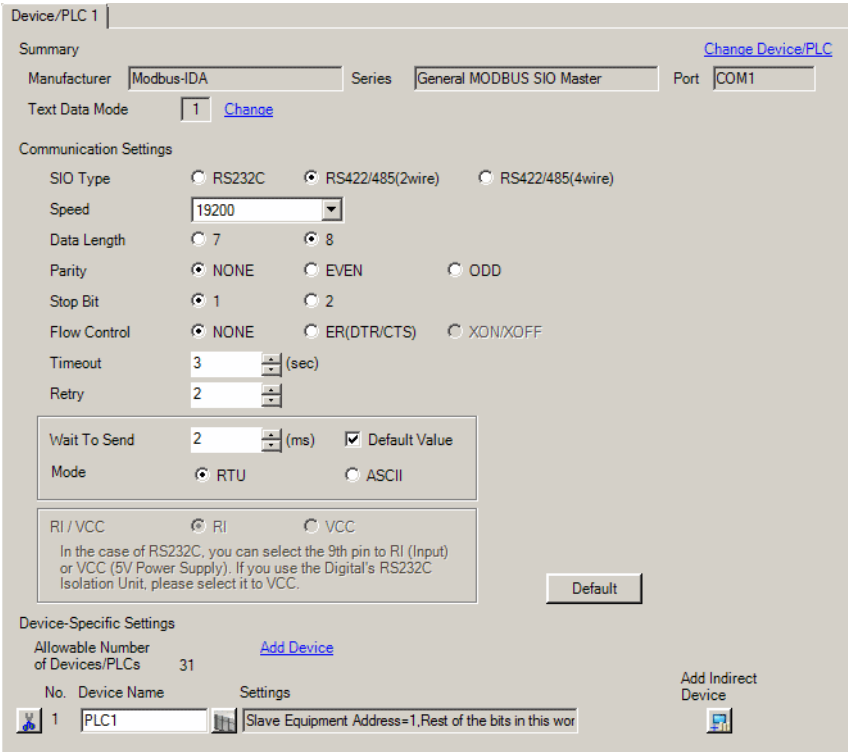

◆ Device Setting

To display the [Individual Device Settings] dialog box, from [Device-Specific Settings] in the [Device/PLC] window, select the external device and click [Settings] .

To connect multiple External Devices, from [Device-Specific Settings] in the [Device/PLC] window, click [Add Device] to add another External Device.

[Equipment Configuration] Tab

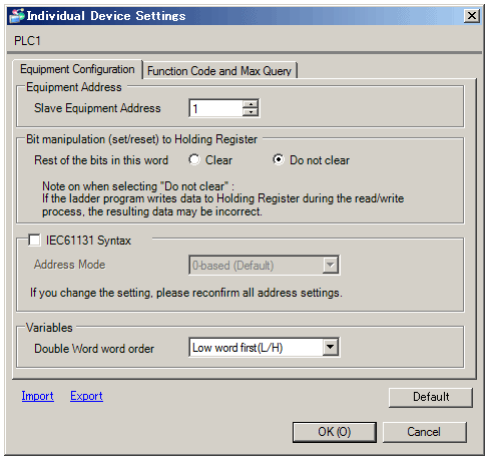

[Function Code and Max Query] Tab

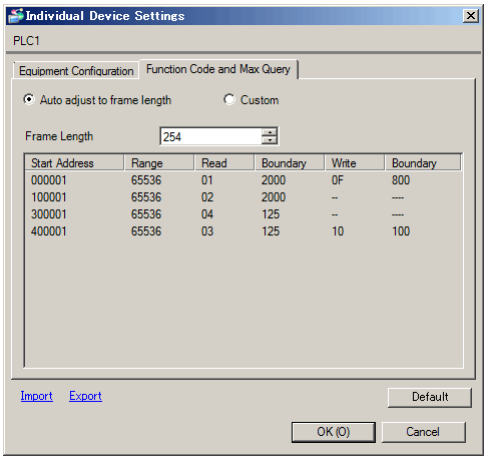

■ External Device Settings

Use the ladder software (GX Works2) for communication settings. Write the data to the following special data register in the ladder software.

After setting the data, turn the External Device off then back on. Please refer to the manual of the External Device for more details.

Special Data Register	Setting	Remarks
D8400	0x1099	Communication Format Data length: 8-bit, None parity, Stop bit: 1-bit, Baud rate (bps): 19200, H/W type: RS485
D8401	0x11	Protocol Protocol Selection: MODBUS serial line, Master/slave setting: MODBUS Slave, RTU/ASCII mode setting: RTU
D8411	0x02	Message to Message Delay
D8414	0x01	Slave Node Address

4.8 Setting Example 8

■ GP-Pro EX Settings

◆ Communication Settings

To display the setup screen, from the [Project] menu, point to [System Settings] and select [Device/PLC].

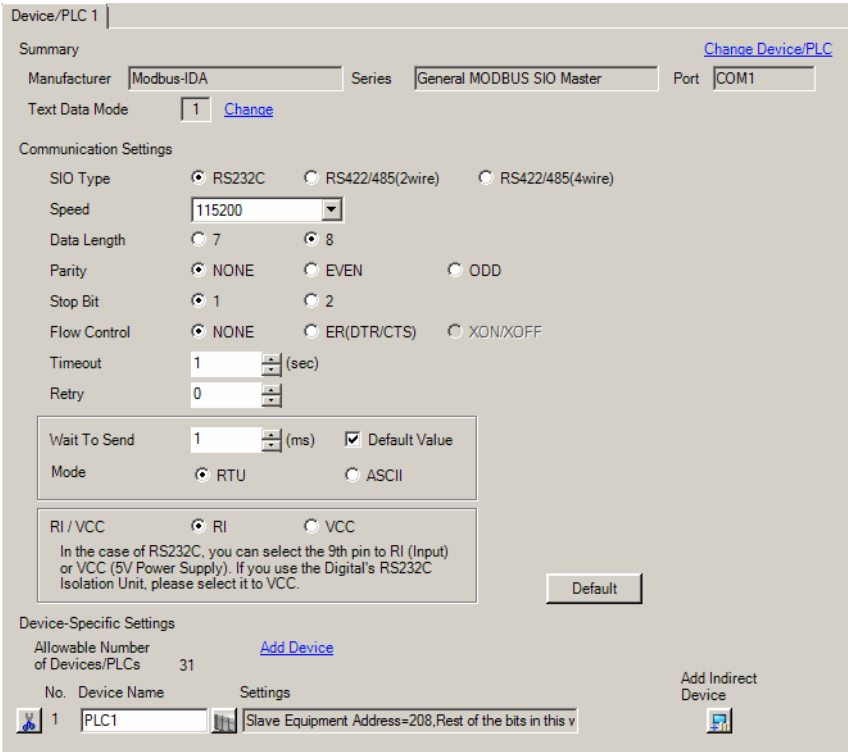

◆ Device Setting

To display the [Individual Device Settings] dialog box, from [Device-Specific Settings] in the [Device/PLC] window, select the external device and click [Settings] .

To connect multiple External Devices, from [Device-Specific Settings] in the [Device/PLC] window, click [Add Device] to add another External Device.

[Equipment Configuration] Tab

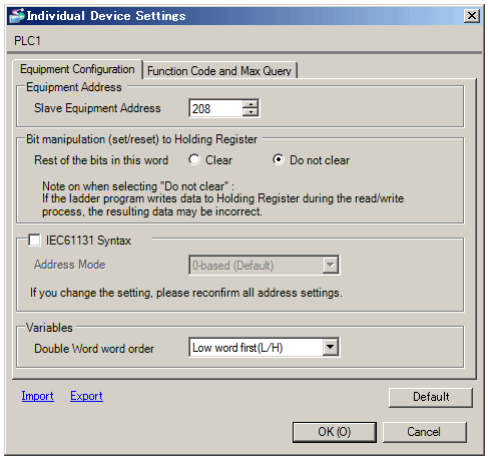

[Function Code and Max Query] Tab

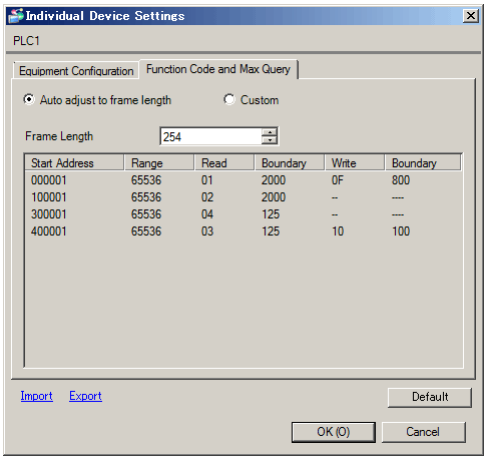

■ External Device Settings (serial communication port on standard unit)

Communication settings are fixed, as follows.

Setup Items	Setting
Baud rate	115.2 Kbps
Slave address	208
Data length	8 bit
Parity bit	None
Start bit	1 bit
Stop bit	1 bit

4.9 Setting Example 9

■ GP-Pro EX Settings

◆ Communication Settings

To display the setup screen, from the [Project] menu, point to [System Settings] and select [Device/PLC].

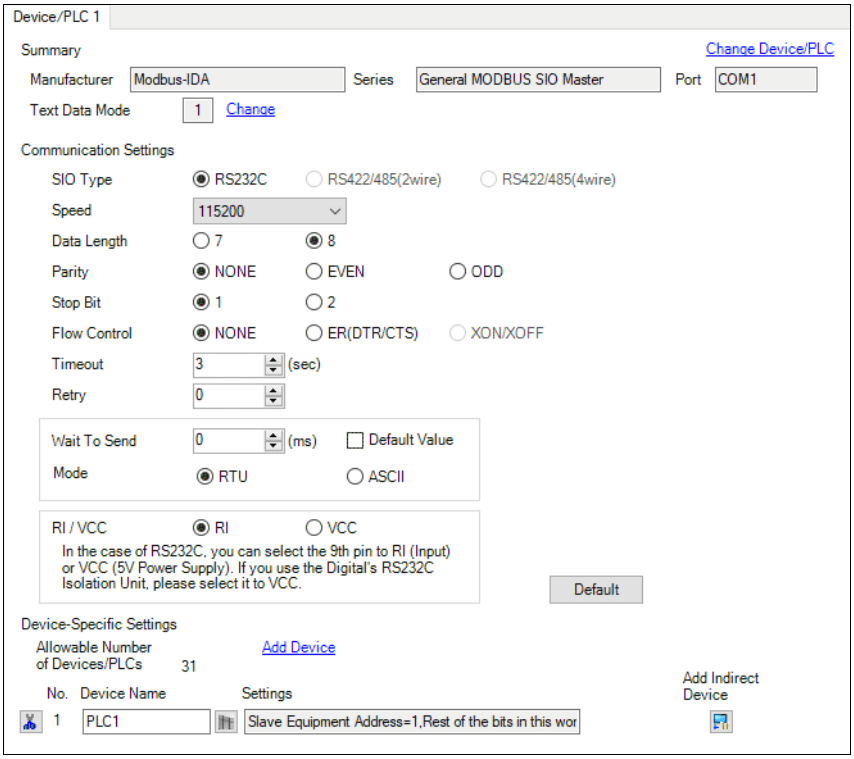

◆ Device Setting

To display the [Individual Device Settings] dialog box, from [Device-Specific Settings] in the [Device/PLC] window, select the external device and click [Settings] .

To connect multiple External Devices, from [Device-Specific Settings] in the [Device/PLC] window, click [Add Device] to add another External Device.

[Equipment Configuration] Tab

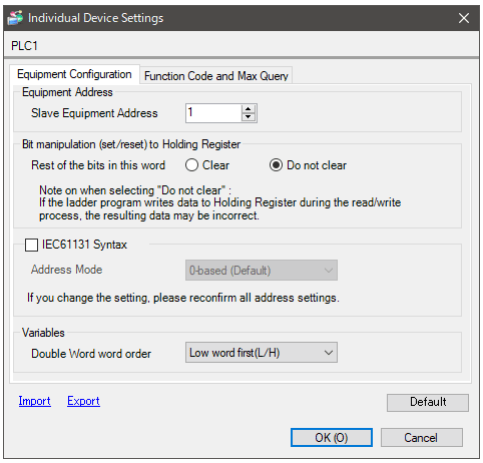

[Function Code and Max Query] Tab

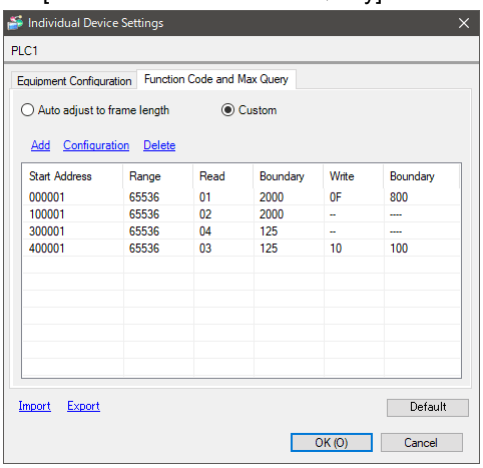

Start Address	Range	Read	Boundary	Write	Boundary
000001	65536	01	2000	0F	800
100001	65536	02	2000	--	----
300001	65536	04	125	--	----
400001	65536	03	125	10	100

■ External Device Settings

Use the MODE selector switch on the RCON-GW and the Parameter Configuration Tool in the IAI GateWay Unit Software for defining communication settings. Please refer to the manual of the External Device for more details.

◆ Procedure

1. Set the RCON-GW's MODE selector switch to "MANU".
2. Start the Parameter Configuration Tool.
3. From SelectGwType, select "RCON".
4. Click [Port Config] to set the COM port to use for communication.
5. Click [OK].
6. Click [Read].
7. Click [Detail setting].
8. From the Axis No.assgnmt / unit config, click [Manual].
   To change the axis number assignment and edit the driver unit, click [Change].
9. Set the axis number assignment and click [OK].
10. Click [Write].

4.10 Setting Example 10

■ GP-Pro EX Settings

◆ Communication Settings

To display the setup screen, from the [Project] menu, point to [System Settings] and select [Device/PLC].

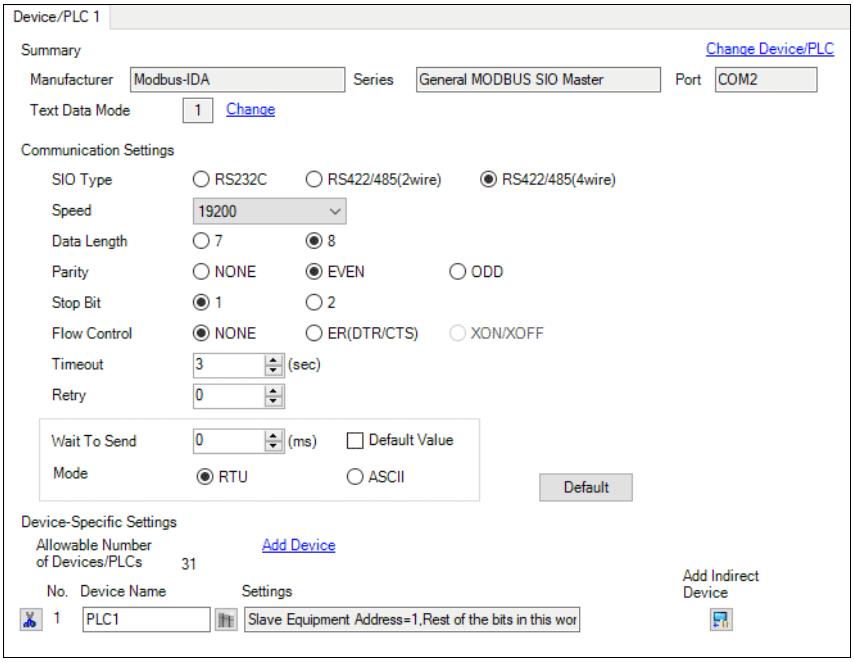

◆ Device Setting

To display the [Individual Device Settings] dialog box, from [Device-Specific Settings] in the [Device/PLC] window, select the external device and click [Settings] .

To connect multiple External Devices, from [Device-Specific Settings] in the [Device/PLC] window, click [Add Device] to add another External Device.

[Equipment Configuration] Tab

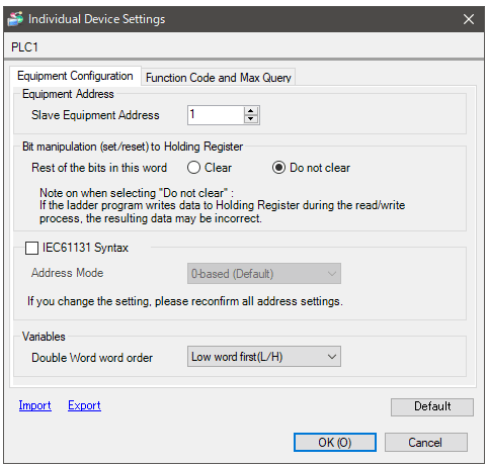

[Function Code and Max Query] Tab

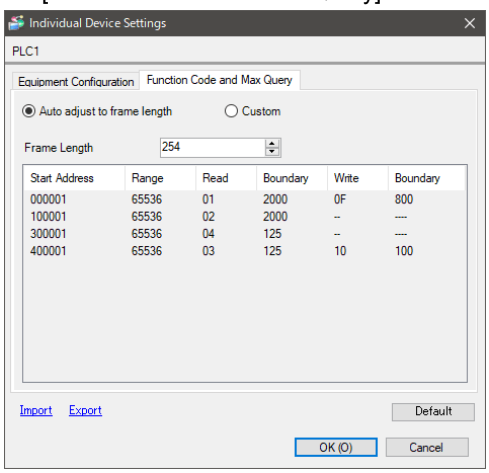

■ External Device Settings

Use ladder software KV STUDIO Ver. 8 or later to define the External Device communication settings. Refer to your External Device manual for details.

◆ Procedure

1. Start up the ladder software.
2. From the [File] menu, select [New project] to display the [New project] dialog box.
3. In the [Project name] field enter the project name, in the [PLC model] property select the External Device, and click [OK].
4. In the [Confirm unit setting information] dialog box click [Yes], and the [Unit Editor] window will display.
5. On the [Select unit] tab, from the displayed list of units select "[1] KV-XL402", then drag & drop to the unit placement area.
6. In the unit placement area click "[1] KV-XL402" and then select the [Setup unit] tab.
7. Configure the setup items as follows.

Setup Items	Setup Description
Operation Mode	Modbus Slave Mode
Interface	RS-422A/485 (4-wire)
Baud Rate	19200bps
Data Bit Length	8 bits (Fixed value)
Start Bit	1 bit (Fixed value)
Stop Bit	1 bit
Parity	Even
Check Sum	None (Fixed value)
Modbus slave Station No. setting method	Unit Editor
Modbus slave Station No.	1

8. From the [Convert] menu, select [Auto-assign relay/DM].
9. From the [File] menu, select [Close] and display the [Unit Editor] dialog box.
10. Click [Yes].
11. From the [Monitor/Simulator] menu, select [Transfer to PLC] to display the [Transfer Program] dialog box.
12. Select the [Unit setting info] and [Program] check boxes, and then click [Execute].
    The settings are transferred.

This completes the setting of the External Device.

4.11 Setting Example 11

■ GP-Pro EX Settings

◆ Communication Settings

To display the setup screen, from the [Project] menu, point to [System Settings] and select [Device/PLC].

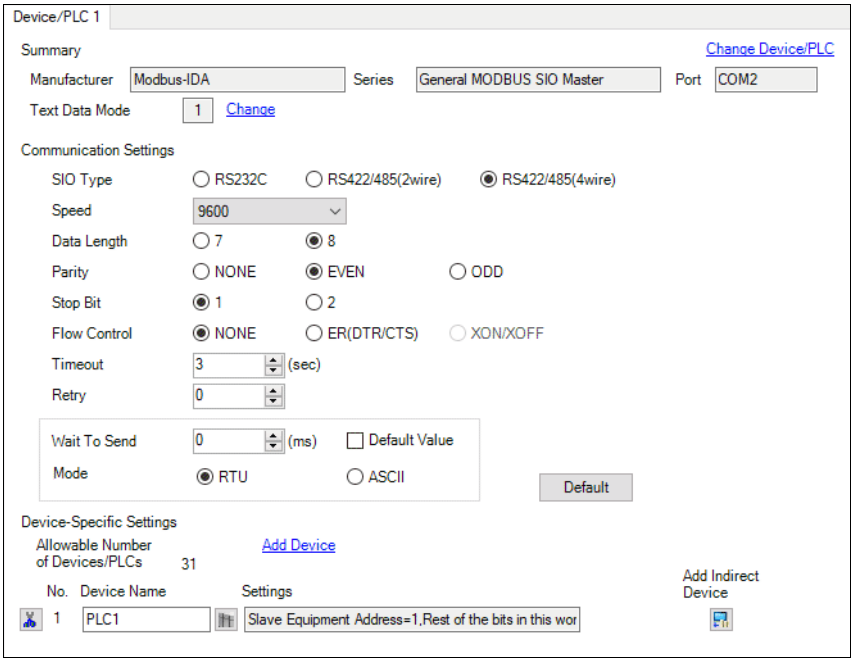

◆ Device Setting

To display the [Individual Device Settings] dialog box, from [Device-Specific Settings] in the [Device/PLC] window, select the external device and click [Settings] .

To connect multiple External Devices, from [Device-Specific Settings] in the [Device/PLC] window, click [Add Device] to add another External Device.

[Equipment Configuration] Tab

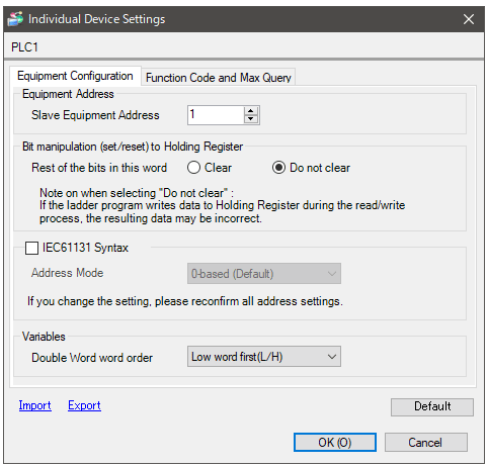

[Function Code and Max Query] Tab

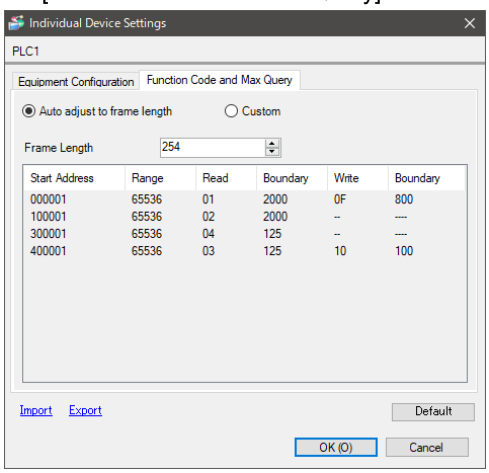

■ External Device Settings

Use ladder software KV STUDIO Ver. 8 or later to define the External Device communication settings. Refer to your External Device manual for details.

◆ Procedure

1. Start up the ladder software.
2. From the [File] menu, select [New project] to display the [New project] dialog box.
3. In the [Project name] field enter the project name, in the [PLC model] property select the External Device, and click [OK].
4. In the [Confirm unit setting information] dialog box click [Yes], and the [Unit Editor] window will display.
5. On the [Select unit] tab, from the displayed list of units select "[1] KV-XL402", then drag & drop to the unit placement area.
6. In the unit placement area click "[1] KV-XL402" and then select the [Setup unit] tab.
7. Configure the setup items as follows.

Setup Items	Setup Description
Operation Mode	Modbus Slave Mode
Interface	RS-422A/485 (4-wire)
Baud Rate	9600bps
Data Bit Length	8 bits (Fixed value)
Start Bit	1 bit (Fixed value)
Stop Bit	1 bit
Parity	Even
Check Sum	None (Fixed value)
Modbus slave Station No. setting method	Unit Editor
Modbus slave Station No.	1

8. From the [Convert] menu, select [Auto-assign relay/DM].
9. From the [File] menu, select [Close] and display the [Unit Editor] dialog box.
10. Click [Yes].
11. From the [Monitor/Simulator] menu, select [Transfer to PLC] to display the [Transfer Program] dialog box.
12. Select the [Unit setting info] and [Program] check boxes, and then click [Execute].
    The settings are transferred.

This completes the setting of the External Device.

4.12 Setting Example 12

■ GP-Pro EX Settings

◆ Communication Settings

To display the setup screen, from the [Project] menu, point to [System Settings] and select [Device/PLC].

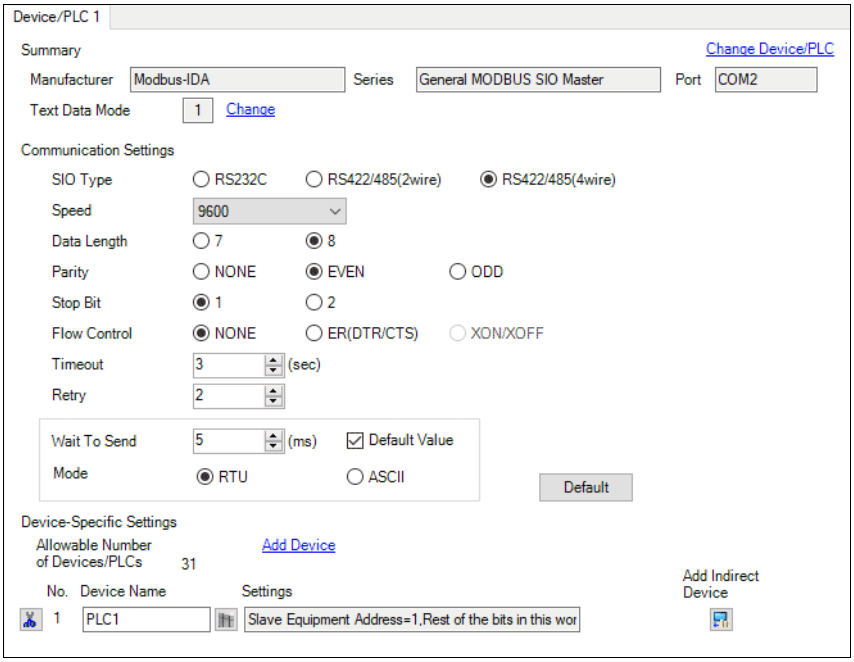

◆ Device Setting

To display the [Individual Device Settings] dialog box, from [Device-Specific Settings] in the [Device/PLC] window, select the external device and click [Settings] .

To connect multiple External Devices, from [Device-Specific Settings] in the [Device/PLC] window, click [Add Device] to add another External Device.

[Equipment Configuration] Tab

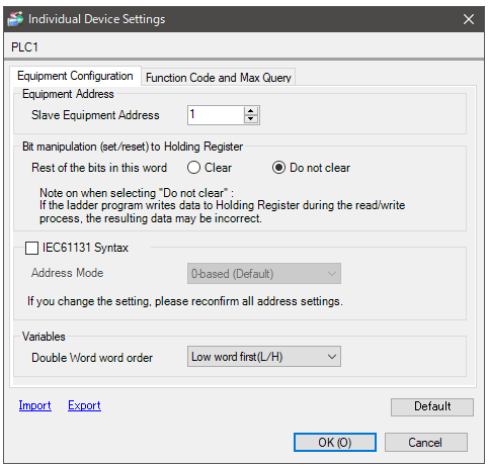

[Function Code and Max Query] Tab

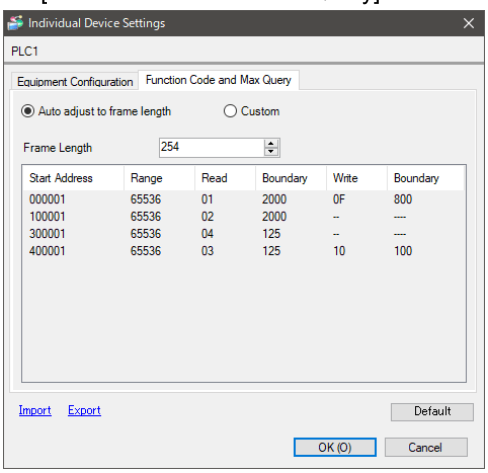

■ External Device Settings

For External Device communication settings, use the ladder software (CX-Programmer).

Refer to your External Device manual for details.

◆ Procedure

1. Start up the ladder software.
2. Select [New] in the [File] menu to display [Change PLC] dialog box.
3. Select External Device in the [Device Type].
4. Click [Settings...] in the [Device Type] to display the [Device Type Settings] dialog box.
5. Select CPU type in the [CPU Type] and click [OK].
6. Select connection type in the [Network Type].
7. Click [OK].
8. Double click [Settings] in the tree view of the work space to display the [PLC Settings] dialog box.
9. Check "Custom" in the [Communications Settings] of the [Serial Port 1] tab.
10. Set the setup items as below..

Setup Items	Setting Value
Baud	9600
Format	8,1,E
Mode	Modbus RTU Slave
Modbus Slave Address	1

11. Close the [PLC Settings] dialog box.
12. Transfer the communication settings to External Device.
13. Reboot the External Device.

◆ Notes

- Do not set the duplicate node address in the same network address group.

4.13 Setting Example 13

■ GP-Pro EX Settings

◆ Communication Settings

To display the setup screen, from the [Project] menu, point to [System Settings] and select [Device/PLC].

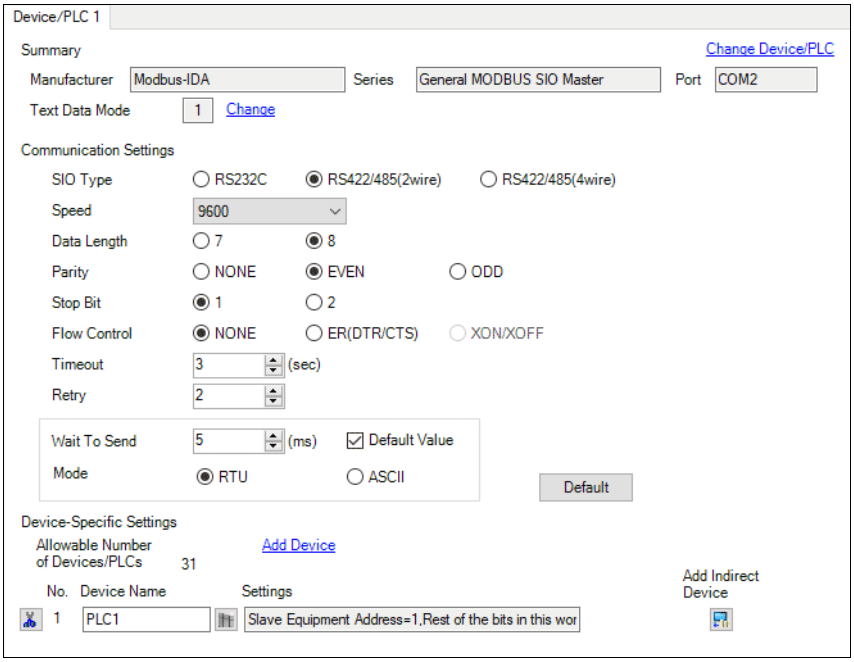

◆ Device Setting

To display the [Individual Device Settings] dialog box, from [Device-Specific Settings] in the [Device/PLC] window, select the external device and click [Settings] .

To connect multiple External Devices, from [Device-Specific Settings] in the [Device/PLC] window, click [Add Device] to add another External Device.

[Equipment Configuration] Tab

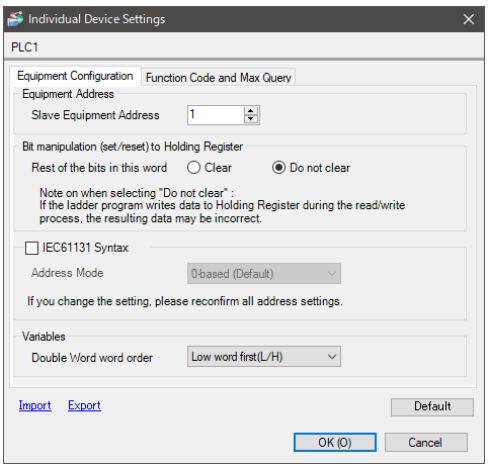

[Function Code and Max Query] Tab

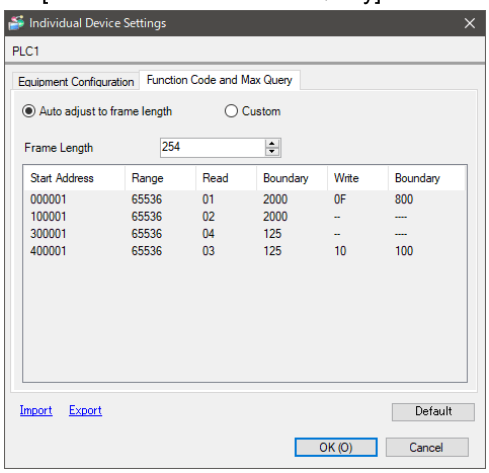

■ External Device Settings

For External Device communication settings, use the ladder software (CX-Programmer).

Refer to your External Device manual for details.

◆ Procedure

1. Start up the ladder software.
2. Select [New] in the [File] menu to display [Change PLC] dialog box.
3. Select External Device in the [Device Type].
4. Click [Settings...] in the [Device Type] to display the [Device Type Settings] dialog box.
5. Select CPU type in the [CPU Type] and click [OK].
6. Select connection type in the [Network Type].
7. Click [OK].
8. Double click [Settings] in the tree view of the work space to display the [PLC Settings] dialog box.
9. Select the tab for the port to be used, and check "Custom" in the [Communications Settings].
10. Set the setup items as below..

Setup Items	Setting Value
Baud	9600
Format	8,1,E
Mode	Modbus RTU Slave
Modbus Slave Address	1

11. Close the [PLC Settings] dialog box.
12. Transfer the communication settings to External Device.
13. Reboot the External Device.

◆ Notes

- Do not set the duplicate node address in the same network address group.

4.14 Setting Example 14

■ GP-Pro EX Settings

◆ Communication Settings

To display the setup screen, from the [Project] menu, point to [System Settings] and select [Device/PLC].

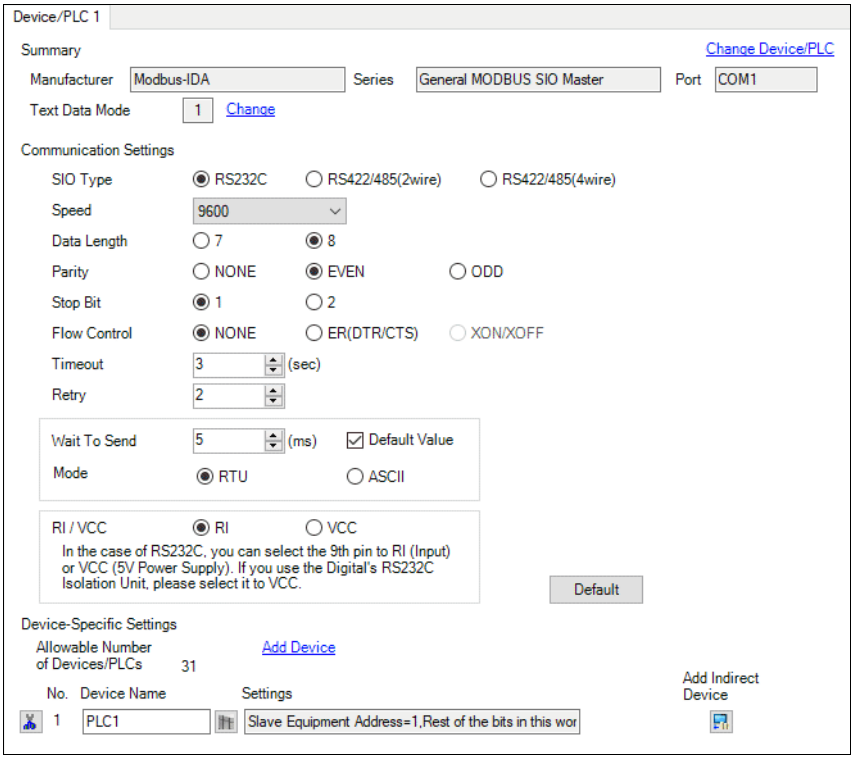

◆ Device Setting

To display the [Individual Device Settings] dialog box, from [Device-Specific Settings] in the [Device/PLC] window, select the external device and click [Settings] .

To connect multiple External Devices, from [Device-Specific Settings] in the [Device/PLC] window, click [Add Device] to add another External Device.

[Equipment Configuration] Tab

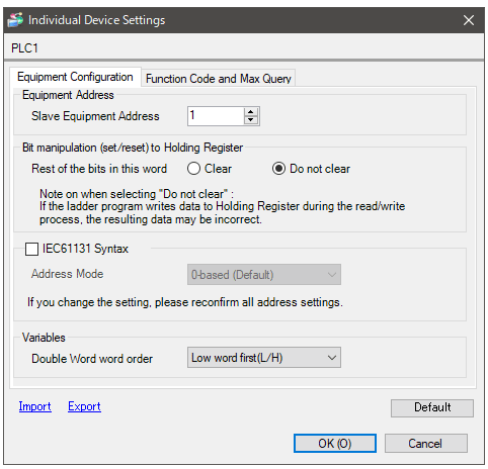

[Function Code and Max Query] Tab

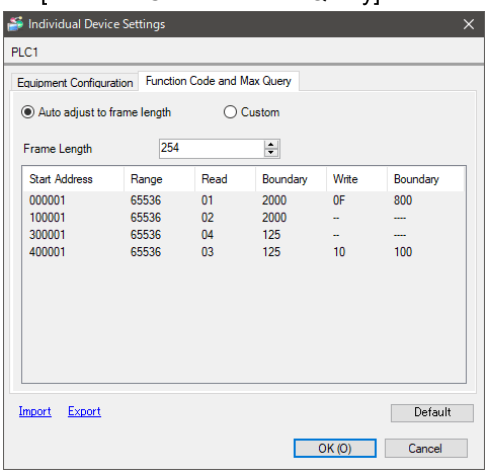

■ External Device Settings

For External Device communication settings, use the ladder software (CX-Programmer).

Refer to your External Device manual for details.

◆ Procedure

1. Start up the ladder software.
2. Select [New] in the [File] menu to display [Change PLC] dialog box.
3. Select External Device in the [Device Type].
4. Click [Settings...] in the [Device Type] to display the [Device Type Settings] dialog box.
5. Select CPU type in the [CPU Type] and click [OK].
6. Select connection type in the [Network Type].
7. Click [OK].
8. Double click [Settings] in the tree view of the work space to display the [PLC Settings] dialog box.
9. Select the tab for the port to be used, and check "Custom" in the [Communications Settings].
10. Set the setup items as below..

Setup Items	Setting Value
Baud	9600
Format	8,1,E
Mode	Modbus RTU Slave
Modbus Slave Address	1

11. Close the [PLC Settings] dialog box.
12. Transfer the communication settings to External Device.
13. Reboot the External Device.

◆ Notes

- Do not set the duplicate node address in the same network address group.

4.15 Setting Example 15

■ GP-Pro EX Settings

◆ Communication Settings

To display the setup screen, from the [Project] menu, point to [System Settings] and select [Device/PLC].

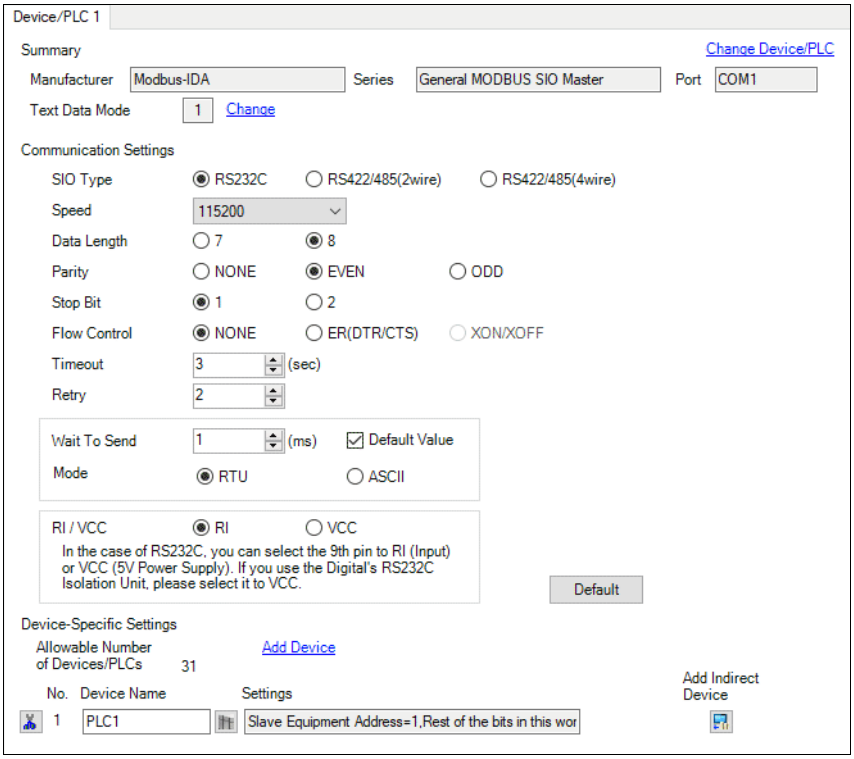

◆ Device Setting

To display the [Individual Device Settings] dialog box, from [Device-Specific Settings] in the [Device/PLC] window, select the external device and click [Settings] .

To connect multiple External Devices, from [Device-Specific Settings] in the [Device/PLC] window, click [Add Device] to add another External Device.

[Equipment Configuration] Tab

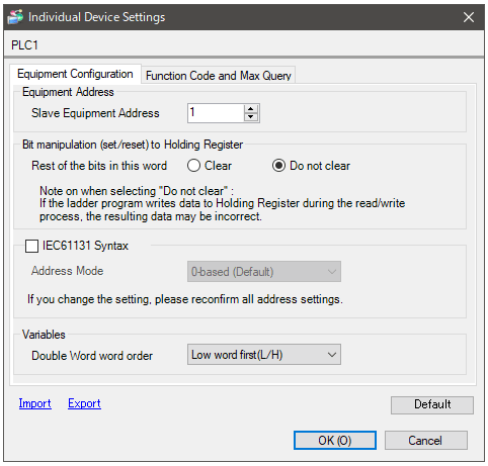

[Function Code and Max Query] Tab

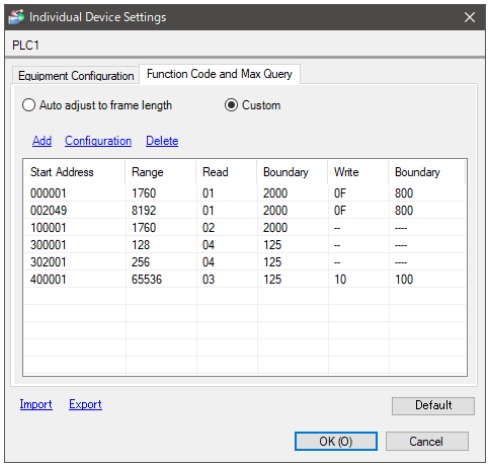

Start Address	Range	Read	Boundary	Write	Boundary
000001	1760	01	2000	0F	800
002049	8192	01	2000	0F	800
100001	1760	02	2000	--	----
300001	128	04	125	--	----
302001	256	04	125	--	----
400001	65536	03	125	10	100

■ External Device Settings

Use the programming software (FPWIN GR7) to set up communication settings on the External Device.

For details on communication settings, please refer to the manual of the External Device.

◆ Procedure

1. Start up the programming software.
2. Select the series for the External Device.
3. Click [OK] to display a new project.
4. From the menu bar, select [Option]-[System register settings...].
5. Click the port ("COM0 Port", "COM1 Port" or "COM2 Port") to be used in [PLC Configuration].
7. Set the each item as follows, and click [OK].

Setup Items		Setting Value
Unit No.		1
Communication Mode		MODBUS RTU
Modem Enabled		Disable
Baud Rate		115200 bps
Communication format	Char. Bit	8 bits
	Parity	Even
	Stop Bit	1

4.16 Setting Example 16

■ GP-Pro EX Settings

◆ Communication Settings

To display the setup screen, from the [Project] menu, point to [System Settings] and select [Device/PLC].

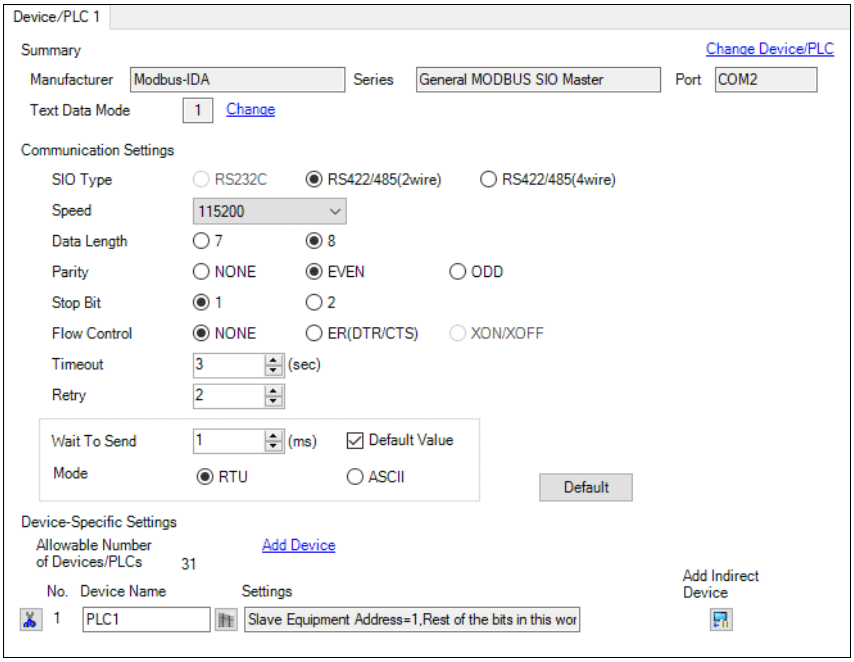

◆ Device Setting

To display the [Individual Device Settings] dialog box, from [Device-Specific Settings] in the [Device/PLC] window, select the external device and click [Settings] .

To connect multiple External Devices, from [Device-Specific Settings] in the [Device/PLC] window, click [Add Device] to add another External Device.

[Equipment Configuration] Tab

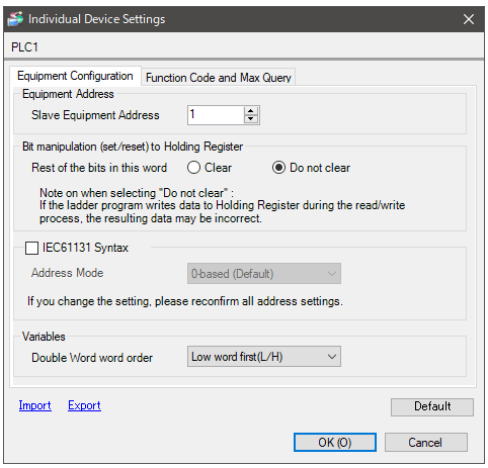

[Function Code and Max Query] Tab

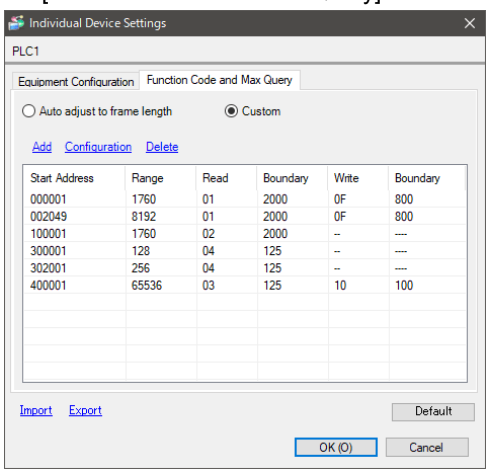

■ External Device Settings

Use the programming software (FPWIN GR7) to set up communication settings on the External Device.

For details on communication settings, please refer to the manual of the External Device.

◆ Procedure

1. Start up the programming software.
2. Select the series for the External Device.
3. Click [OK] to display a new project.
4. From the menu bar, select [Option]-[System register settings...].
5. Click the port ("COM0 Port", "COM1 Port" or "COM2 Port") to be used in [PLC Configuration].
7. Set the each item as follows, and click [OK].

Setup Items		Setting Value
Unit No.		1
Communication Mode		MODBUS RTU
Modem Enabled		Disable
Baud Rate		115200 bps
Communication format	Char. Bit	8 bits
	Parity	Even
	Stop Bit	1

4.17 Setting Example 17

■ GP-Pro EX Settings

◆ Communication Settings

To display the setup screen, from the [Project] menu, point to [System Settings] and select [Device/PLC].

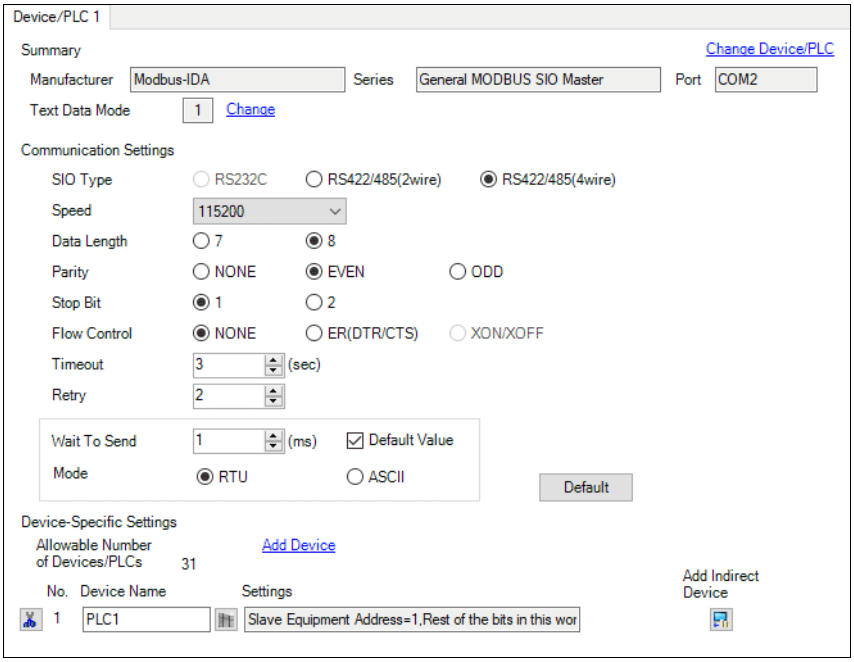

◆ Device Setting

To display the [Individual Device Settings] dialog box, from [Device-Specific Settings] in the [Device/PLC] window, select the external device and click [Settings] .

To connect multiple External Devices, from [Device-Specific Settings] in the [Device/PLC] window, click [Add Device] to add another External Device.

[Equipment Configuration] Tab

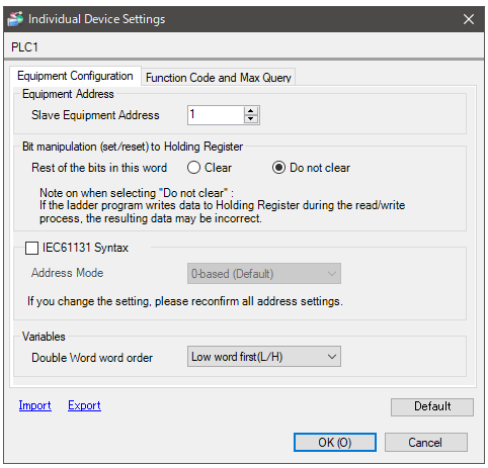

[Function Code and Max Query] Tab

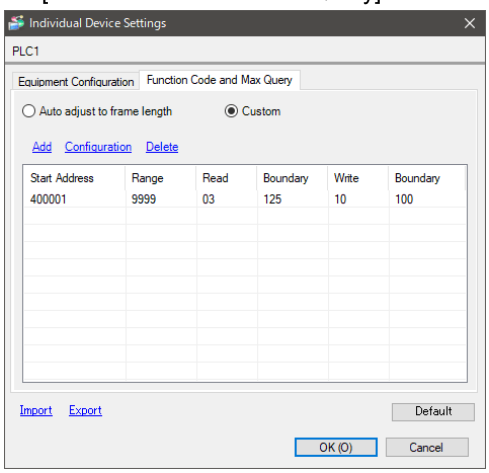

■ External Device Settings

Use the PU/EXT key, MODE key, M dial and SET key in the operation panel of the CPU unit for External Device communication settings.

Refer to your External Device manual for details.

◆ Procedure

1. Turn ON the power supply.
2. Press PU/EXT key to select the PU operation mode.
3. Press MODE key to select the parameter setting mode.
4. Display the setting parameter number with M dial.
5. Press SET key to display the current setting value.
6. Set the setting value with M dial.
7. Press SET key to confirm the setting value.

Setting Parameter Number	Setting Value	Setup Description
331 (N030)	1	Inverter station number
332 (N031)	1152	RS-485 communication speed
N032	0	RS-485 communication data length: 8 bits (fixed)
334 (N034)	2	RS-485 communication parity check selection: Even parity check available. Stop bit length: 1 bit.
549	1	Protocol Selection: MODBUS RTU protocol

NOTE

- Always restart the Eternal Device after changing parameters.

4.18 Setting Example 18

■ GP-Pro EX Settings

◆ Communication Settings

To display the setup screen, from the [Project] menu, point to [System Settings] and select [Device/PLC].

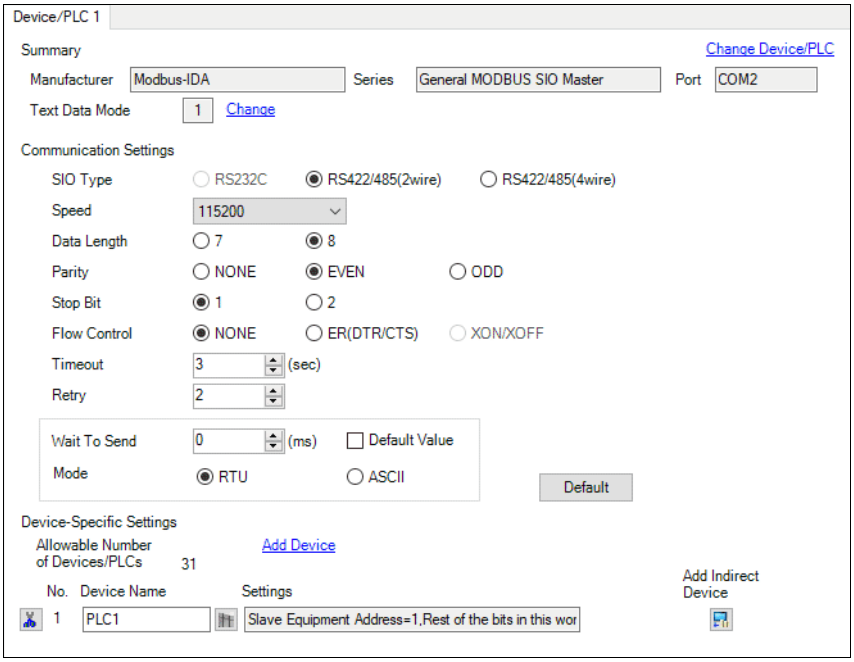

◆ Device Setting

To display the [Individual Device Settings] dialog box, from [Device-Specific Settings] in the [Device/PLC] window, select the external device and click [Settings] .

To connect multiple External Devices, from [Device-Specific Settings] in the [Device/PLC] window, click [Add Device] to add another External Device.

[Equipment Configuration] Tab

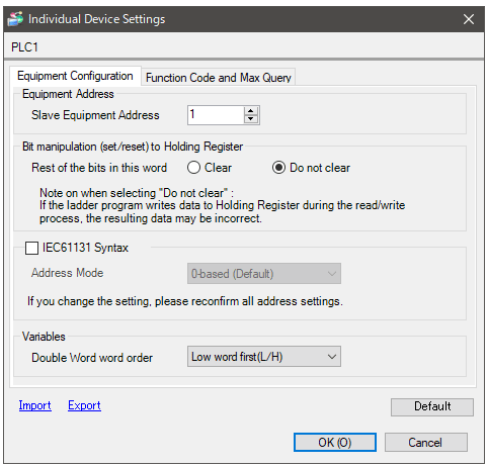

[Function Code and Max Query] Tab

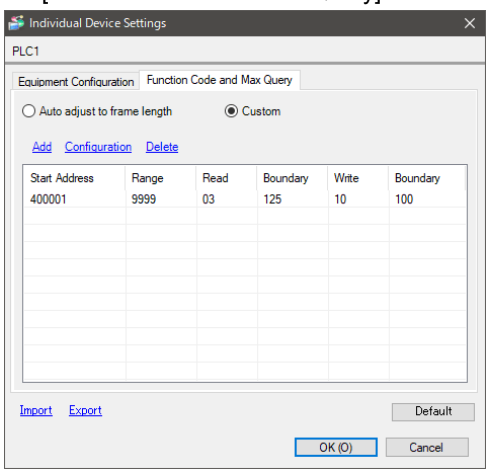

■ External Device Settings

Use the PU/EXT key, MODE key, M dial and SET key in the operation panel of the CPU unit for External Device communication settings.

Refer to your External Device manual for details.

◆ Procedure

1. Turn ON the power supply.
2. Press PU/EXT key to select the PU operation mode.
3. Press MODE key to select the parameter setting mode.
4. Display the setting parameter number with M dial.
5. Press SET key to display the current setting value.
6. Set the setting value with M dial.
7. Press SET key to confirm the setting value.

Setting Parameter Number	Setting Value	Setup Description
331 (N030)	1	RS-485 communication station number: Inverter station number
332 (N031)	1152	RS-485 communication speed
N032	0	RS-485 communication data length: 8 bits (fixed)
334 (N034)	2	RS-485 communication parity check selection: Even parity check available. Stop bit length: 1 bit.
549	1	Protocol Selection: MODBUS RTU protocol

NOTE

- Always restart the Eternal Device after changing parameters.

4.19 Setting Example 19

■ GP-Pro EX Settings

◆ Communication Settings

To display the setup screen, from the [Project] menu, point to [System Settings] and select [Device/PLC].

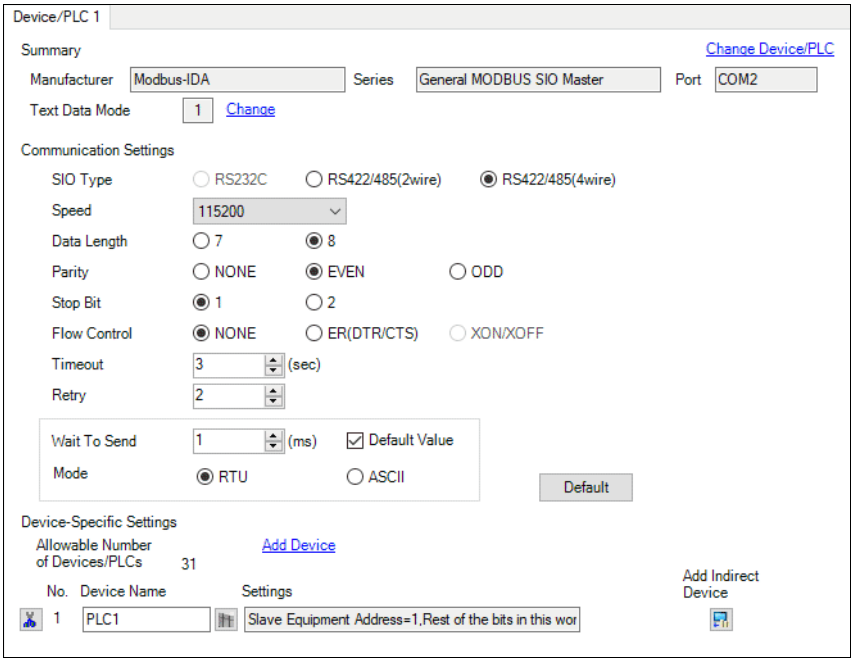

◆ Device Setting

To display the [Individual Device Settings] dialog box, from [Device-Specific Settings] in the [Device/PLC] window, select the external device and click [Settings] .

To connect multiple External Devices, from [Device-Specific Settings] in the [Device/PLC] window, click [Add Device] to add another External Device.

[Equipment Configuration] Tab

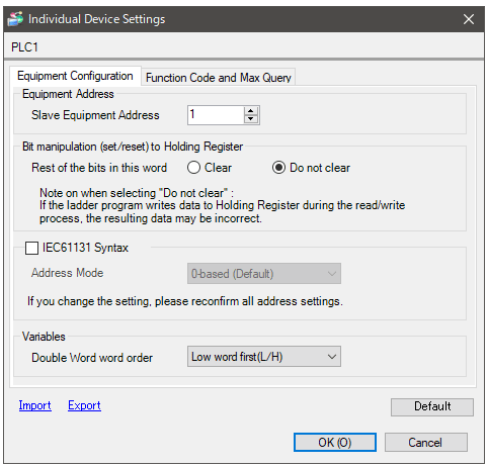

[Function Code and Max Query] Tab

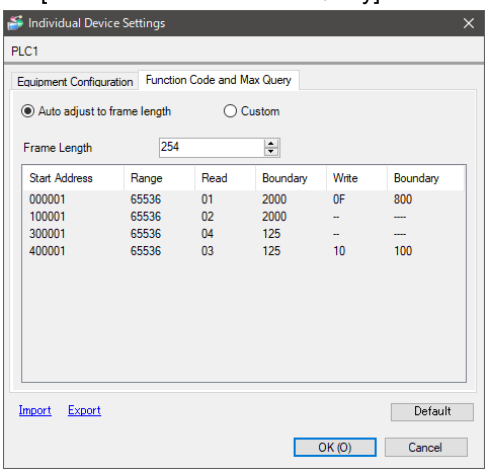

■ External Device Settings

Use the PU/EXT key, MODE key, M dial and SET key in the operation panel of the CPU unit for External Device communication settings.

Refer to your External Device manual for details.

◆ Procedure

1. Turn ON the power supply.
2. Press PU/EXT key to select the PU operation mode.
3. Press MODE key to select the parameter setting mode.
4. Display the setting parameter number with M dial.
5. Press SET key to display the current setting value.
6. Set the setting value with M dial.
7. Press SET key to confirm the setting value.

Setting Parameter Number	Setting Value	Setup Description
549 N000	1	Protocol Selection: MODBUS RTU protocol
117 N020	1	PU communication station number: Inverter station number
118 N021	1152	PU communication speed
120 N024	2	PU communication parity check: Even parity check available. Stop bit length: 1 bit.
122 N026	0	PU communication check time interval

NOTE

- Always restart the Eternal Device after changing parameters.

4.20 Setting Example 20

■ GP-Pro EX Settings

◆ Communication Settings

To display the setup screen, from the [Project] menu, point to [System Settings] and select [Device/PLC].

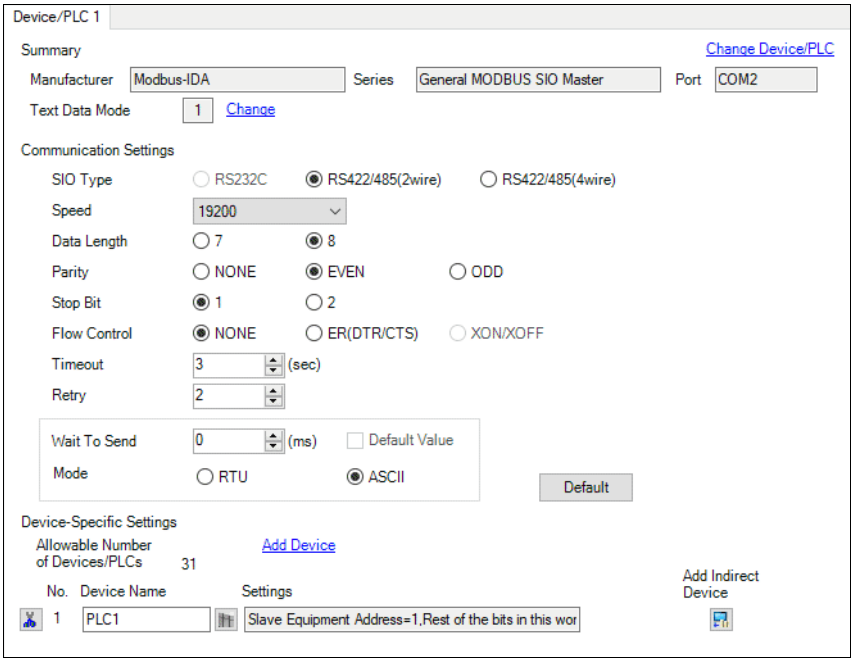

◆ Device Setting

To display the [Individual Device Settings] dialog box, from [Device-Specific Settings] in the [Device/PLC] window, select the external device and click [Settings] .

To connect multiple External Devices, from [Device-Specific Settings] in the [Device/PLC] window, click [Add Device] to add another External Device.

[Equipment Configuration] Tab

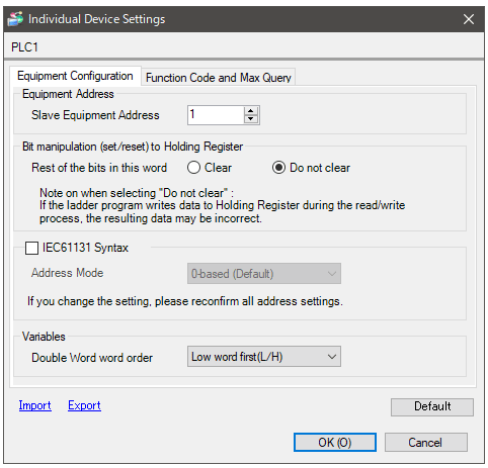

[Function Code and Max Query] Tab

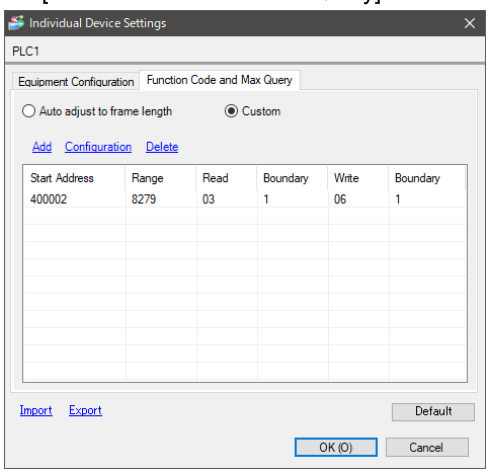

■ External Device Settings

Use the SET key, MODE key, UP key and DOWN key of the External Device for communication settings of the External Device.

Please refer to the manual of the External Device for more details.

1. Turn ON the power supply.

↓ Press the SET key 4 times in PV/SV Display Mode.

2. Change to Engineering group.

↓ Press the MODE key.

3. Change to Input group.

↓ Press the SET key multiple times.

4. Change to Communication group.

↓ Press the MODE key.

5. Change to Communication protocol.

↓ Set to “MODA” (MODBUS ASCII protocol) with the UP key or the DOWN key, and press the MODE key.

6. Set Instrument number.

↓ Set to “1” with the UP key or the DOWN key, and press the MODE key.

7. Set Communication speed.

↓ Set to “192” (19200 bps) with the UP key or the DOWN key, and press the MODE key.

8. Set Data bit/Parity.

↓ Set to “8EVN” (8 bits/Even) with the UP key or the DOWN key, and press the MODE key.

9. Set Stop bit.

↓ Set to “1” (1 bit) with the UP key or the DOWN key, and press the MODE key.

10. Set SVTC bias.

↓ Press the MODE key.

Completion of setting

4.21 Setting Example 21

■ GP-Pro EX Settings

◆ Communication Settings

To display the setup screen, from the [Project] menu, point to [System Settings] and select [Device/PLC].

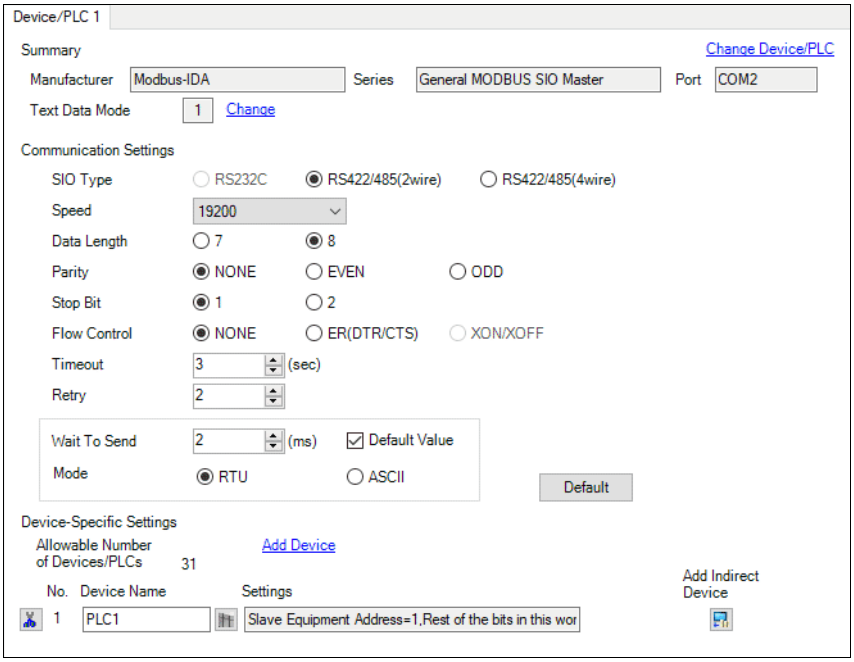

◆ Device Setting

To display the [Individual Device Settings] dialog box, from [Device-Specific Settings] in the [Device/PLC] window, select the external device and click [Settings] .

To connect multiple External Devices, from [Device-Specific Settings] in the [Device/PLC] window, click [Add Device] to add another External Device.

[Equipment Configuration] Tab

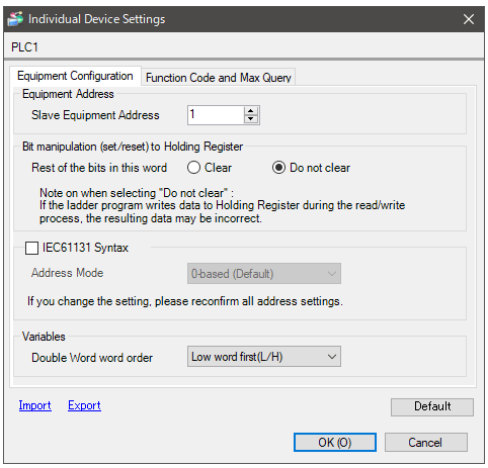

[Function Code and Max Query] Tab

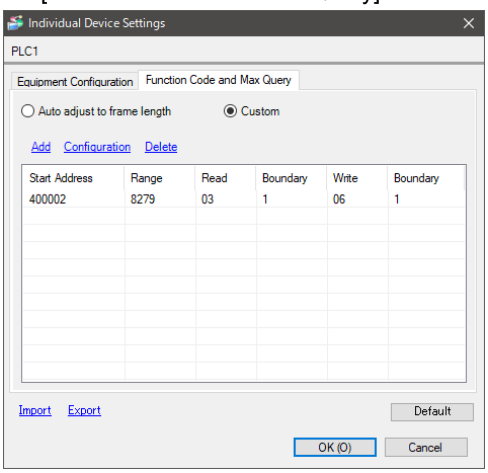

■ External Device Settings

Use the SET key, MODE key, UP key and DOWN key of the External Device for communication settings of the External Device.

Please refer to the manual of the External Device for more details.

1. Turn ON the power supply.

↓ Press the SET key 4 times in PV/SV Display Mode.

2. Change to Engineering group.

↓ Press the MODE key.

3. Change to Input group.

↓ Press the SET key multiple times.

4. Change to Communication group.

↓ Press the MODE key.

5. Change to Communication protocol.

↓ Set to “MODR” (MODBUS RTU protocol) with the UP key or the DOWN key, and press the MODE key.

6. Set Instrument number.

↓ Set to “1” with the UP key or the DOWN key, and press the MODE key.

7. Set Communication speed.

↓ Set to “192” (19200 bps) with the UP key or the DOWN key, and press the MODE key.

8. Set Data bit/Parity.

↓ Set to “8NON” (8 bits/No parity) with the UP key or the DOWN key, and press the MODE key.

9. Set Stop bit.

↓ Set to “1” (1 bit) with the UP key or the DOWN key, and press the MODE key.

10. Set SVTC bias.

↓ Press the MODE key.

Completion of setting

4.22 Setting Example 22

■ GP-Pro EX Settings

◆ Communication Settings

To display the setup screen, from the [Project] menu, point to [System Settings] and select [Device/PLC].

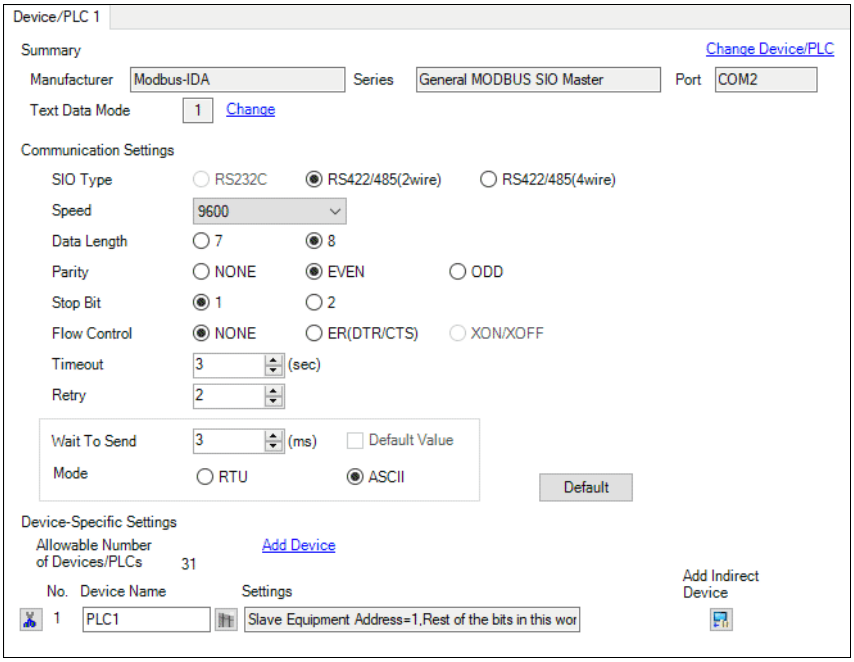

◆ Device Setting

To display the [Individual Device Settings] dialog box, from [Device-Specific Settings] in the [Device/PLC] window, select the external device and click [Settings] .

To connect multiple External Devices, from [Device-Specific Settings] in the [Device/PLC] window, click [Add Device] to add another External Device.

[Equipment Configuration] Tab

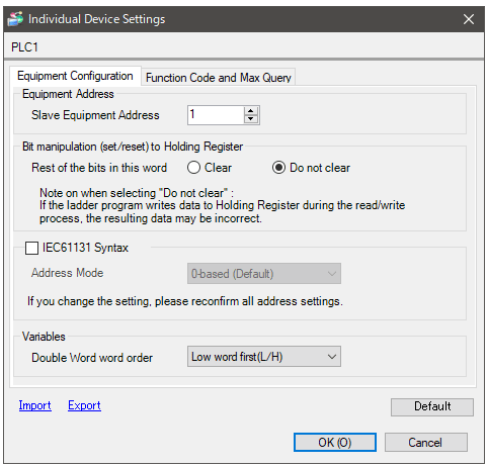

[Function Code and Max Query] Tab

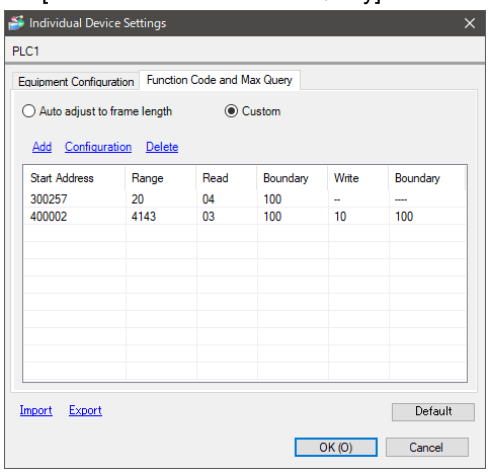

■ External Device Settings

Use the MODE key, UP key key and DOWN key in front of the External Device for communication settings of the External Device.

Please refer to the manual of the External Device for more details.

1. Turn ON the power supply.

↓ Press the UP key and the DOWN key (in that order) together for approx. 3 seconds in RUN mode.

2. Change to Engineering Mode 1.

↓ Press the MODE key several times.

3. Change to Communication protocol.

↓ Set to “MODA” (MODBUS ASCII protocol) with the UP key or the DOWN key, and press the MODE key.

4. Set Instrument number.

↓ Set to “1” with the UP key or the DOWN key, and press the MODE key.

5. Set Communication speed.

↓ Set to “96” (9600bps) with the UP key or the DOWN key, and press the MODE key.

6. Set Data bit/Parity.

↓ Set to “8EVN” (8 bits/Even) with the UP key or the DOWN key, and press the MODE key.

7. Set Stop bit.

↓ Set to “1” (1 bit) with the UP key or the DOWN key, and press the MODE key.

8. Set Response delay time.

↓ Set to “10” (10 ms) with the UP key or the DOWN key, and press the MODE key several times.

9. Change to RUN mode.

↓

Completion of setting

4.23 Setting Example 23

■ GP-Pro EX Settings

◆ Communication Settings

To display the setup screen, from the [Project] menu, point to [System Settings] and select [Device/PLC].

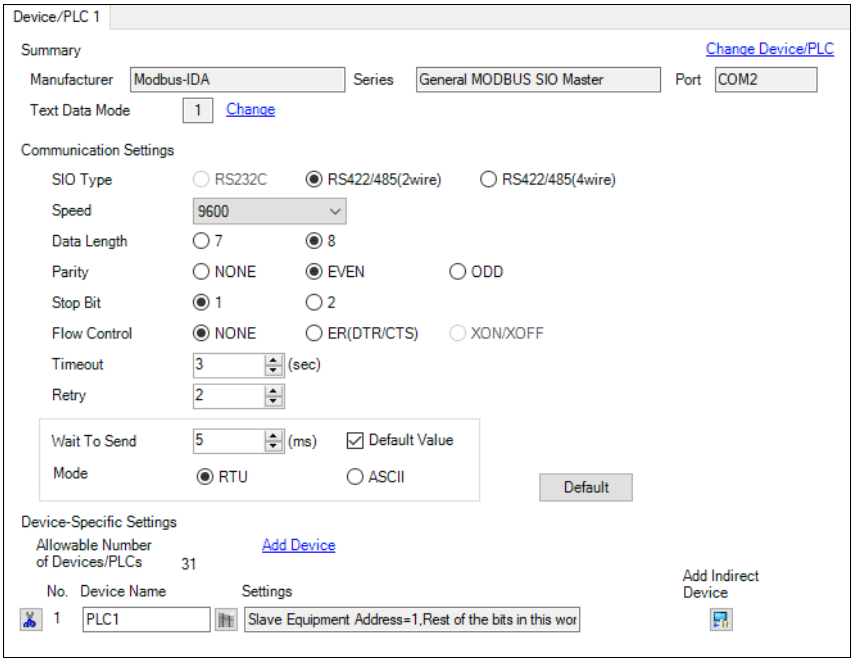

◆ Device Setting

To display the [Individual Device Settings] dialog box, from [Device-Specific Settings] in the [Device/PLC] window, select the external device and click [Settings] .

To connect multiple External Devices, from [Device-Specific Settings] in the [Device/PLC] window, click [Add Device] to add another External Device.

[Equipment Configuration] Tab

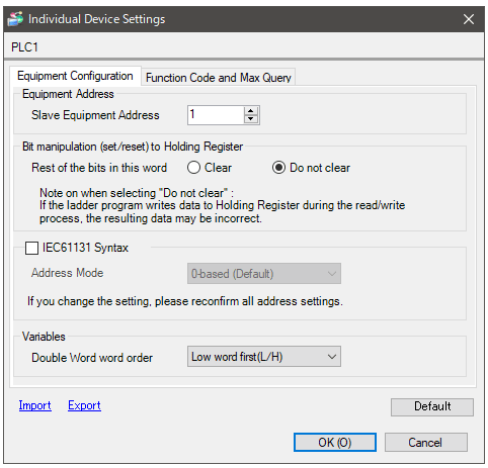

[Function Code and Max Query] Tab

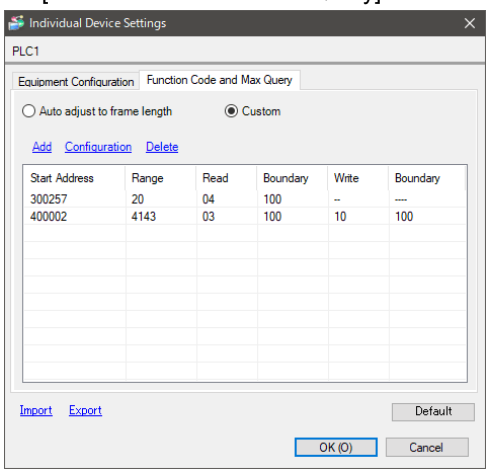

■ External Device Settings

Use the MODE key, UP key key and DOWN key in front of the External Device for communication settings of the External Device.

Please refer to the manual of the External Device for more details.

1. Turn ON the power supply.

↓ Press the UP key and the DOWN key (in that order) together for approx. 3 seconds in RUN mode.

2. Change to Engineering Mode 1.

↓ Press the MODE key several times.

3. Change to Communication protocol.

↓ Set to “MODR” (MODBUS RTU protocol) with the UP key or the DOWN key, and press the MODE key.

4. Set Instrument number.

↓ Set to “1” with the UP key or the DOWN key, and press the MODE key.

5. Set Communication speed.

↓ Set to “96” (9600bps) with the UP key or the DOWN key, and press the MODE key.

6. Set Data bit/Parity.

↓ Set to “8EVN” (8 bits/Even) with the UP key or the DOWN key, and press the MODE key.

7. Set Stop bit.

↓ Set to “1” (1 bit) with the UP key or the DOWN key, and press the MODE key.

8. Set Response delay time.

↓ Set to “10” (10 ms) with the UP key or the DOWN key, and press the MODE key several times.

9. Change to RUN mode.

↓

Completion of setting

4.24 Setting Example 24

■ GP-Pro EX Settings

◆ Communication Settings

To display the setup screen, from the [Project] menu, point to [System Settings] and select [Device/PLC].

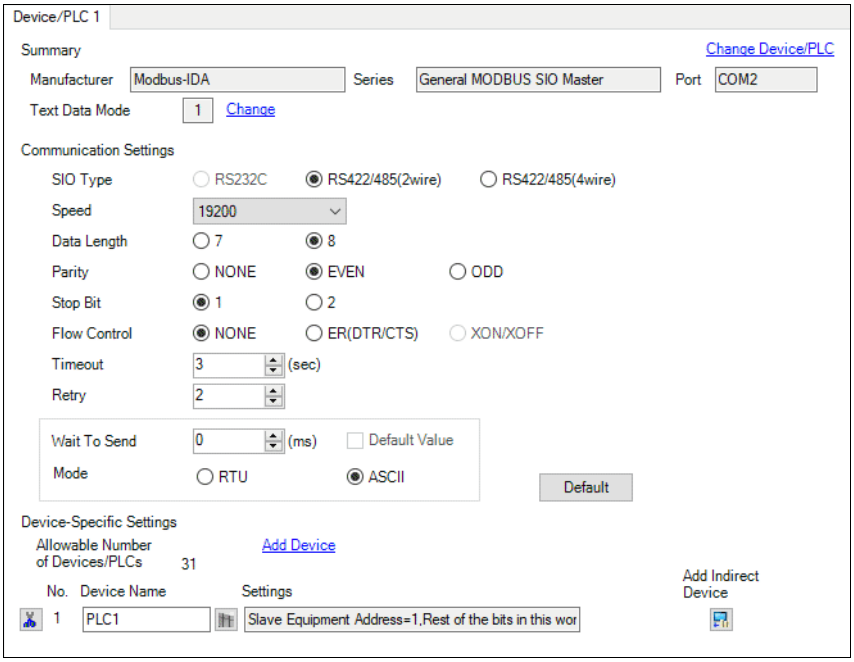

◆ Device Setting

To display the [Individual Device Settings] dialog box, from [Device-Specific Settings] in the [Device/PLC] window, select the external device and click [Settings] .

To connect multiple External Devices, from [Device-Specific Settings] in the [Device/PLC] window, click [Add Device] to add another External Device.

[Equipment Configuration] Tab

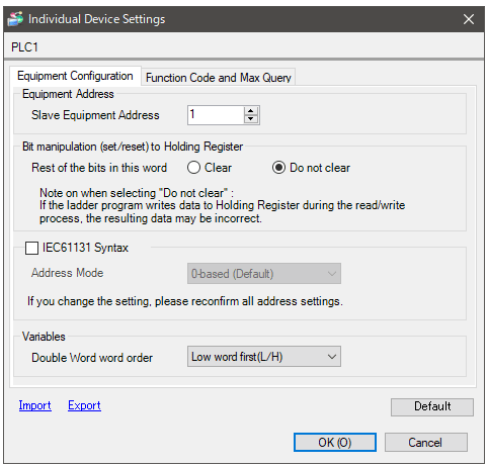

[Function Code and Max Query] Tab

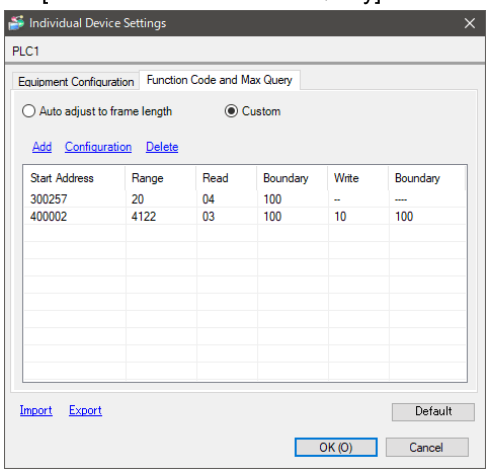

■ External Device Settings

Use the MODE key, UP key key and DOWN key in front of the External Device for communication settings of the External Device.

Please refer to the manual of the External Device for more details.

1. Turn ON the power supply.

↓ Press the UP key and the DOWN key (in that order) together for approx. 3 seconds in RUN mode.

2. Change to Engineering Mode 1.

↓ Press the MODE key several times.

3. Change to Communication protocol.

↓ Set to “MODA” (MODBUS ASCII protocol) with the UP key or the DOWN key, and press the MODE key.

4. Set Instrument number.

↓ Set to “1” with the UP key or the DOWN key, and press the MODE key.

5. Set Communication speed.

↓ Set to “192” (19200bps) with the UP key or the DOWN key, and press the MODE key.

6. Set Data bit/Parity.

↓ Set to “8EVN” (8 bits/Even) with the UP key or the DOWN key, and press the MODE key.

7. Set Stop bit.

↓ Set to “1” (1 bit) with the UP key or the DOWN key, and press the MODE key.

8. Set Response delay time.

↓ Set to “10” (10 ms) with the UP key or the DOWN key, and press the MODE key several times.

9. Change to RUN mode.

↓

Completion of setting

4.25 Setting Example 25

■ GP-Pro EX Settings

◆ Communication Settings

To display the setup screen, from the [Project] menu, point to [System Settings] and select [Device/PLC].

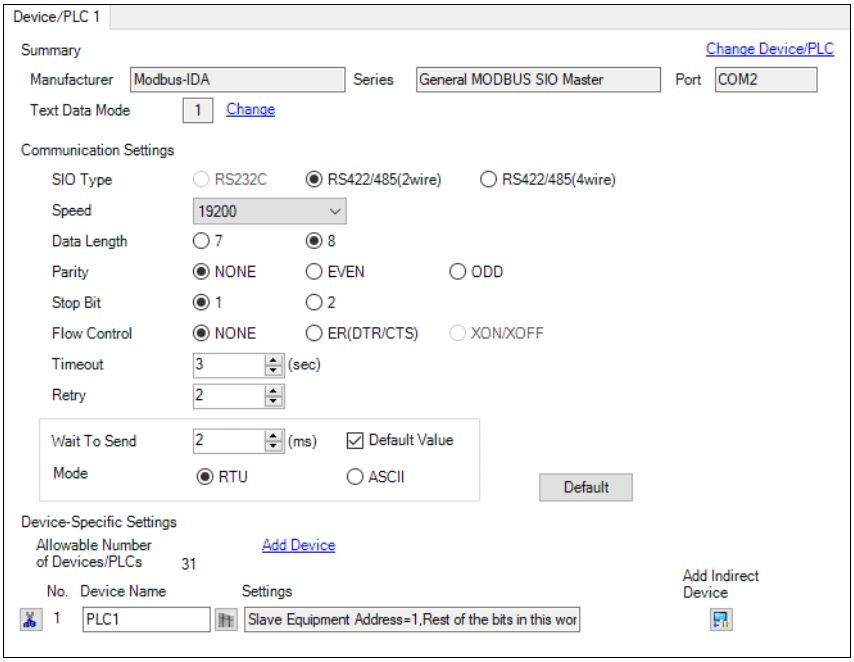

◆ Device Setting

To display the [Individual Device Settings] dialog box, from [Device-Specific Settings] in the [Device/PLC] window, select the external device and click [Settings] .

To connect multiple External Devices, from [Device-Specific Settings] in the [Device/PLC] window, click [Add Device] to add another External Device.

[Equipment Configuration] Tab

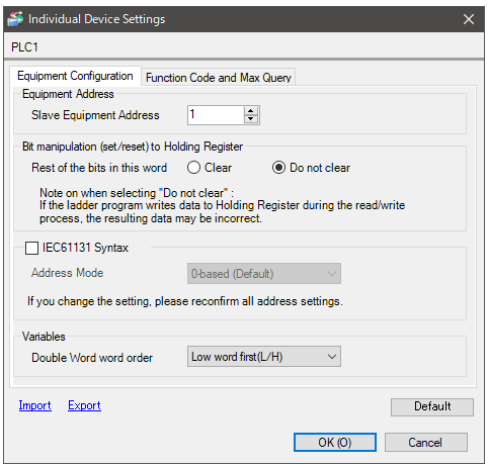

[Function Code and Max Query] Tab

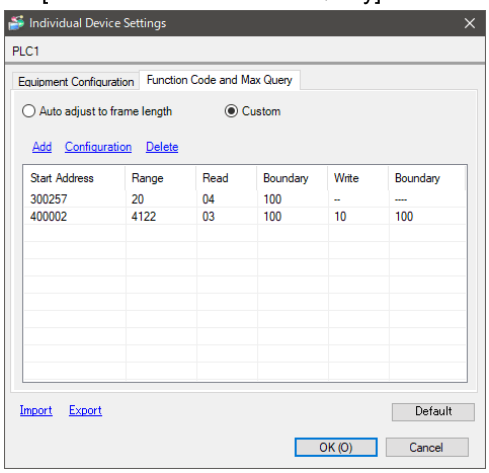

■ External Device Settings

Use the MODE key, UP key key and DOWN key in front of the External Device for communication settings of the External Device.

Please refer to the manual of the External Device for more details.

1. Turn ON the power supply.

↓ Press the UP key and the DOWN key (in that order) together for approx. 3 seconds in RUN mode.

2. Change to Engineering Mode 1.

↓ Press the MODE key several times.

3. Change to Communication protocol.

↓ Set to “MODR” (MODBUS RTU protocol) with the UP key or the DOWN key, and press the MODE key.

4. Set Instrument number.

↓ Set to “1” with the UP key or the DOWN key, and press the MODE key.

5. Set Communication speed.

↓ Set to “192” (19200bps) with the UP key or the DOWN key, and press the MODE key.

6. Set Data bit/Parity.

↓ Set to “8EVN” (8 bits/Even) with the UP key or the DOWN key, and press the MODE key.

7. Set Stop bit.

↓ Set to “1” (1 bit) with the UP key or the DOWN key, and press the MODE key.

8. Set Response delay time.

↓ Set to “10” (10 ms) with the UP key or the DOWN key, and press the MODE key several times.

9. Change to RUN mode.

↓

Completion of setting

4.26 Setting Example 26

■ GP-Pro EX Settings

◆ Communication Settings

To display the setup screen, from the [Project] menu, point to [System Settings] and select [Device/PLC].

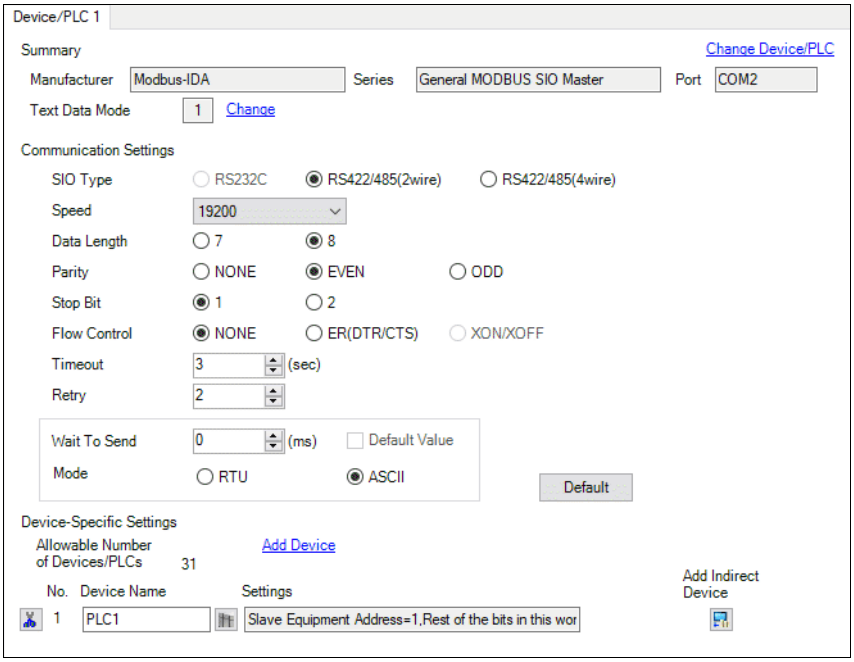

◆ Device Setting

To display the [Individual Device Settings] dialog box, from [Device-Specific Settings] in the [Device/PLC] window, select the external device and click [Settings] .

To connect multiple External Devices, from [Device-Specific Settings] in the [Device/PLC] window, click [Add Device] to add another External Device.

[Equipment Configuration] Tab

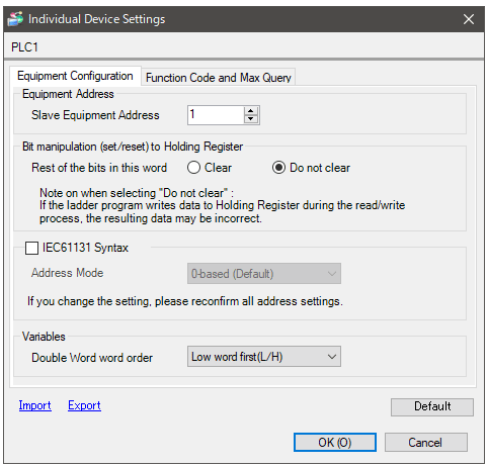

[Function Code and Max Query] Tab

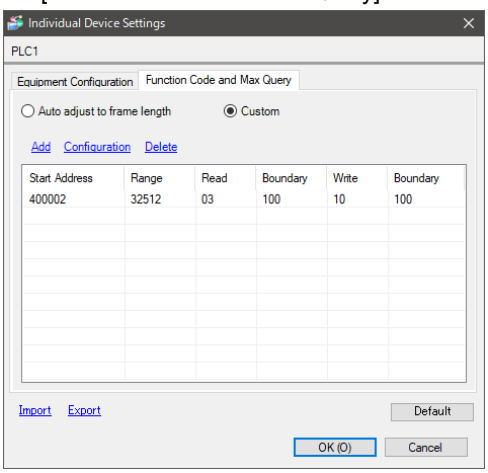

■ External Device Settings

Use the SET/RESET key, STOP/MODE key, HOLD/ENTER key, ADVANCE/DOWN key and PATTERN/UP key in front of the External Device for communication settings of the External Device.
Please refer to the manual of the External Device for more details.

1. Turn ON the power supply.

↓ Press the SET/RESET key in RUN mode.

2. Change to Group selection mode.

↓ Press the STOP/MODE key 4 times.

3. Change to Engineering setting group.

↓ Press the HOLD/ENTER key.

4. Change to Input parameter setting group.

↓ Press the STOP/MODE key several times.

5. Change to Communication parameter setting group.

↓ Press the HOLD/ENTER key.

6. Change to Communication protocol.

↓ Set to “MODA” (MODBUS ASCII protocol) with the PATTERN/UP key or the ADVANCE/DOWN key, and press the HOLD/ENTER key.

7. Set Instrument number.

↓ Set to “1” with the PATTERN/UP key or the ADVANCE/DOWN key, and press the HOLD/ENTER key.

8. Set Communication speed.

↓ Set to “192” (19200 bps) with the PATTERN/UP key or the ADVANCE/DOWN key, and press the HOLD/ENTER key.

9. Set Data bit/Parity.

↓ Set to “8EVN” (8 bits/Even) with the PATTERN/UP key or the ADVANCE/DOWN key, and press the HOLD/ENTER key.

10. Set Stop bit.

↓ Set to “1” (1 bit) with the PATTERN/UP key or the ADVANCE/DOWN key, and press the HOLD/ENTER key.

11. Set Response delay time.

↓ Set to “10” (10 ms) with the PATTERN/UP key or the ADVANCE/DOWN key, and press the HOLD/ENTER key.

Completion of setting

4.27 Setting Example 27

■ GP-Pro EX Settings

◆ Communication Settings

To display the setup screen, from the [Project] menu, point to [System Settings] and select [Device/PLC].

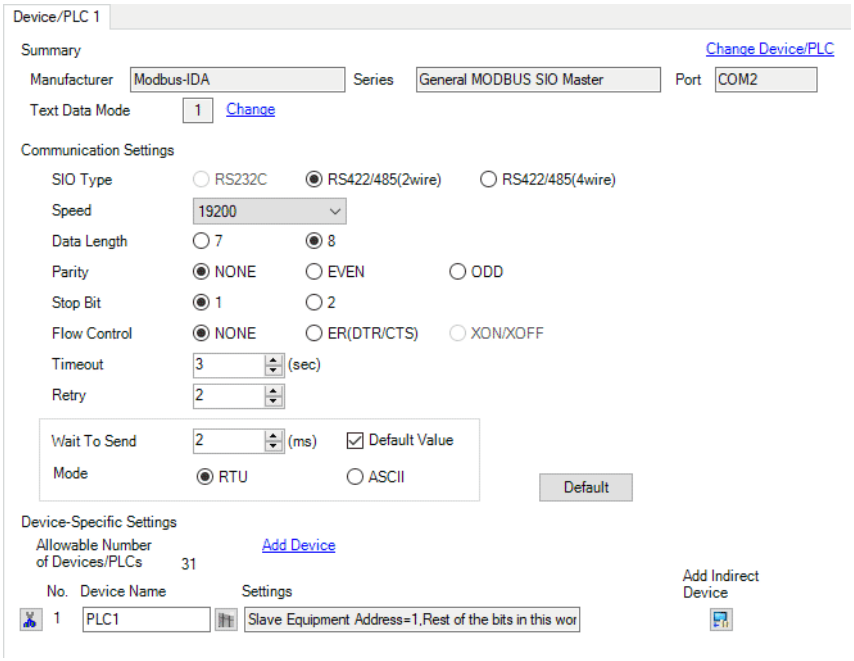

◆ Device Setting

To display the [Individual Device Settings] dialog box, from [Device-Specific Settings] in the [Device/PLC] window, select the external device and click [Settings] .

To connect multiple External Devices, from [Device-Specific Settings] in the [Device/PLC] window, click [Add Device] to add another External Device.

[Equipment Configuration] Tab

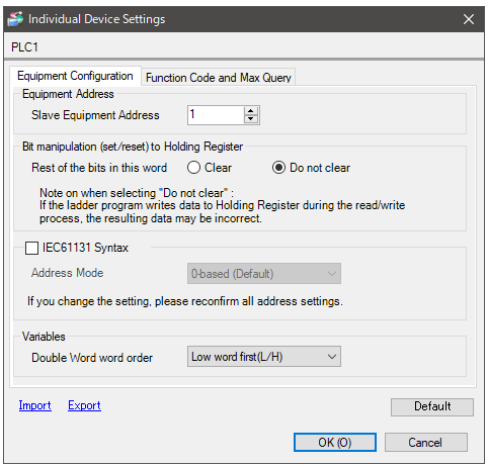

[Function Code and Max Query] Tab

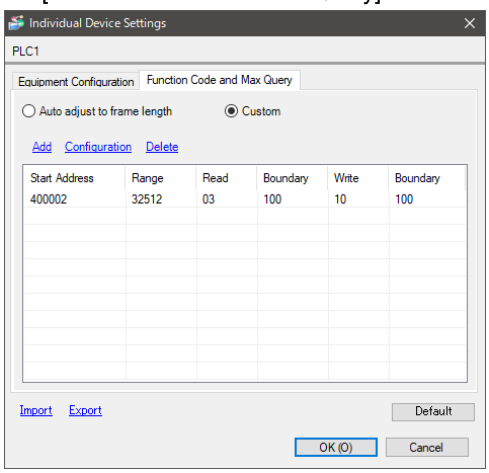

■ External Device Settings

Use the SET/RESET key, STOP/MODE key, HOLD/ENTER key, ADVANCE/DOWN key and PATTERN/UP key in front of the External Device for communication settings of the External Device.
Please refer to the manual of the External Device for more details.

1. Turn ON the power supply.

↓ Press the SET/RESET key in RUN mode.

2. Change to Group selection mode.

↓ Press the STOP/MODE key 4 times.

3. Change to Engineering setting group.

↓ Press the HOLD/ENTER key.

4. Change to Input parameter setting group.

↓ Press the STOP/MODE key several times.

5. Change to Communication parameter setting group.

↓ Press the HOLD/ENTER key.

6. Change to Communication protocol.

↓ Set to “MODR” (MODBUS RTU protocol) with the PATTERN/UP key or the ADVANCE/DOWN key, and press the HOLD/ENTER key.

7. Set Instrument number.

↓ Set to “1” with the PATTERN/UP key or the ADVANCE/DOWN key, and press the HOLD/ENTER key.

8. Set Communication speed.

↓ Set to “192” (19200 bps) with the PATTERN/UP key or the ADVANCE/DOWN key, and press the HOLD/ENTER key.

9. Set Data bit/Parity.

↓ Set to “8NON” (8 bits/No parity) with the PATTERN/UP key or the ADVANCE/DOWN key, and press the HOLD/ENTER key.

10. Set Stop bit.

↓ Set to “1” (1 bit) with the PATTERN/UP key or the ADVANCE/DOWN key, and press the HOLD/ENTER key.

11. Set Response delay time.

↓ Set to “10” (10 ms) with the PATTERN/UP key or the ADVANCE/DOWN key, and press the HOLD/ENTER key.

Completion of setting

4.28 Setting Example 28

■ GP-Pro EX Settings

◆ Communication Settings

To display the setup screen, from the [Project] menu, point to [System Settings] and select [Device/PLC].

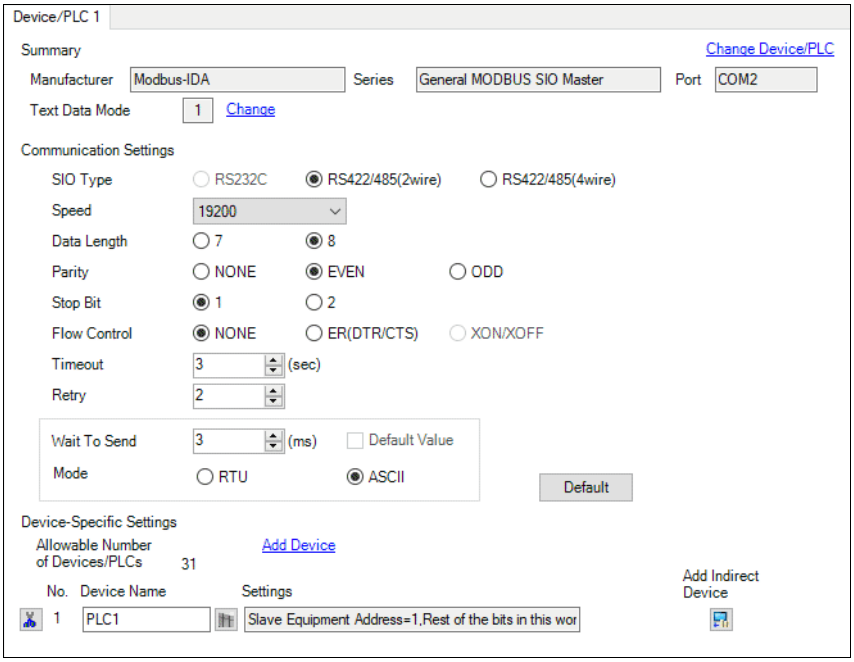

◆ Device Setting

To display the [Individual Device Settings] dialog box, from [Device-Specific Settings] in the [Device/PLC] window, select the external device and click [Settings] .

To connect multiple External Devices, from [Device-Specific Settings] in the [Device/PLC] window, click [Add Device] to add another External Device.

[Equipment Configuration] Tab

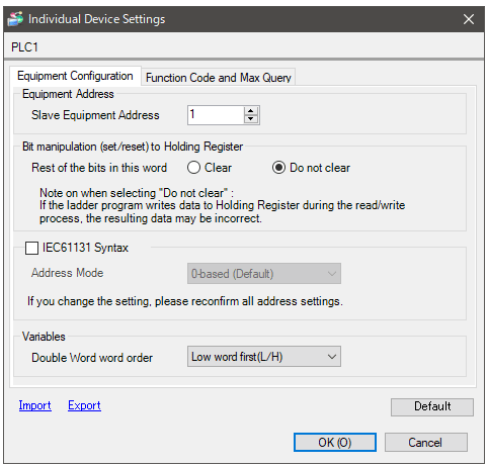

[Function Code and Max Query] Tab

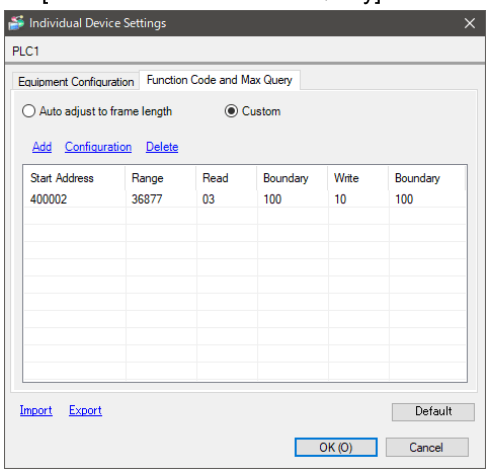

■ External Device Settings

Use the UP key, DOWN key and MODE key in front of the External Device for communication settings of the External Device.

Please refer to the manual of the External Device for more details.

1. Turn ON the power supply.

↓ Press the DOWN key and the MODE key (in that order) together for approx. 3 seconds in RUN mode.

2. Change to Engineering setting mode 1.

↓ Press the MODE key several times.

3. Change to Communication protocol.

↓ Set to “MODA” (MODBUS ASCII protocol) with the UP key or the DOWN key, and press the MODE key.

4. Set to Instrument number.

↓ Set to “1” with the UP key or the DOWN key, and press the MODE key.

5. Set Communication speed.

↓ Set to “96” (9600bps) with the UP key or the DOWN key, and press the MODE key.

6. Set Data bit/Parity.

↓ Set to “8EVN” (8 bits/Even) with the UP key or the DOWN key, and press the MODE key.

7. Set Stop bit.

↓ Set to “1” (1 bit) with the UP key or the DOWN key, and press the MODE key.

8. Set Response delay time.

↓ Set to “10” (10 ms) with the UP key or the DOWN key, and press the MODE key.

Completion of setting

4.29 Setting Example 29

■ GP-Pro EX Settings

◆ Communication Settings

To display the setup screen, from the [Project] menu, point to [System Settings] and select [Device/PLC].

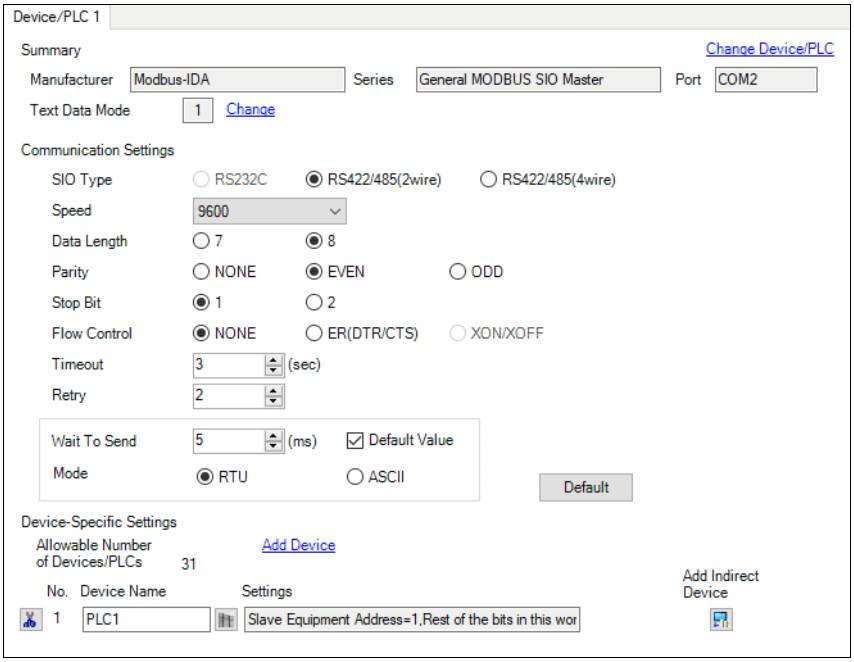

◆ Device Setting

To display the [Individual Device Settings] dialog box, from [Device-Specific Settings] in the [Device/PLC] window, select the external device and click [Settings] .

To connect multiple External Devices, from [Device-Specific Settings] in the [Device/PLC] window, click [Add Device] to add another External Device.

[Equipment Configuration] Tab

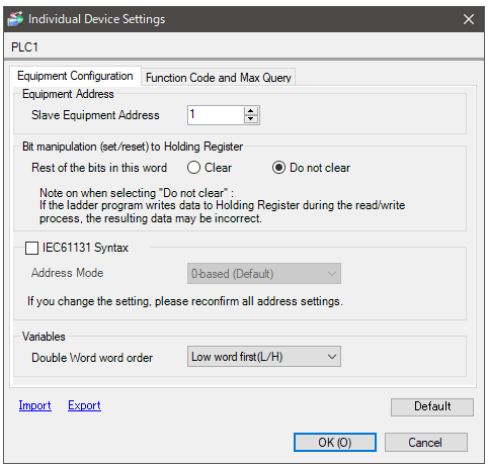

[Function Code and Max Query] Tab

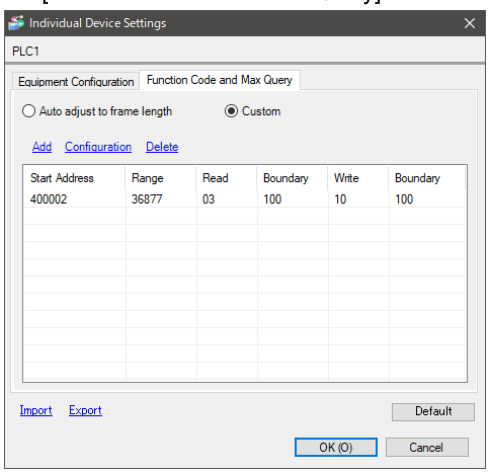

■ External Device Settings

Use the UP key, DOWN key and MODE key in front of the External Device for communication settings of the External Device.

Please refer to the manual of the External Device for more details.

1. Turn ON the power supply.

↓ Press the DOWN key and the MODE key (in that order) together for approx. 3 seconds in RUN mode.

2. Change to Engineering setting mode 1.

↓ Press the MODE key several times.

3. Change to Communication protocol.

↓ Set to “MODR” (MODBUS RTU protocol) with the UP key or the DOWN key, and press the MODE key.

4. Set to Instrument number.

↓ Set to “1” with the UP key or the DOWN key, and press the MODE key.

5. Set Communication speed.

↓ Set to “96” (9600bps) with the UP key or the DOWN key, and press the MODE key.

6. Set Data bit/Parity.

↓ Set to “8EVN” (8 bits/Even) with the UP key or the DOWN key, and press the MODE key.

7. Set Stop bit.

↓ Set to “1” (1 bit) with the UP key or the DOWN key, and press the MODE key.

8. Set Response delay time.

↓ Set to “10” (10 ms) with the UP key or the DOWN key, and press the MODE key.

Completion of setting

4.30 Setting Example 30

■ GP-Pro EX Settings

◆ Communication Settings

To display the setup screen, from the [Project] menu, point to [System Settings] and select [Device/PLC].

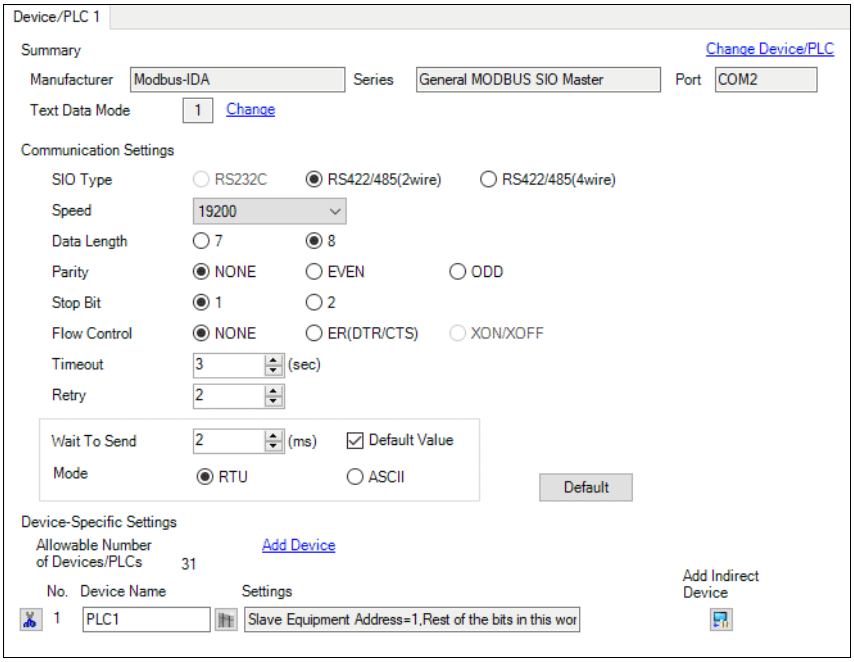

◆ Device Setting

To display the [Individual Device Settings] dialog box, from [Device-Specific Settings] in the [Device/PLC] window, select the external device and click [Settings] .

To connect multiple External Devices, from [Device-Specific Settings] in the [Device/PLC] window, click [Add Device] to add another External Device.

[Equipment Configuration] Tab

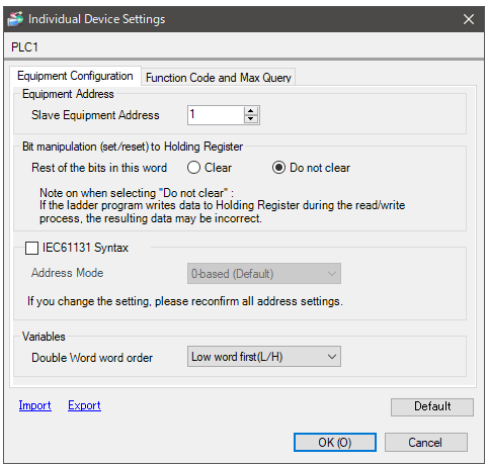

[Function Code and Max Query] Tab

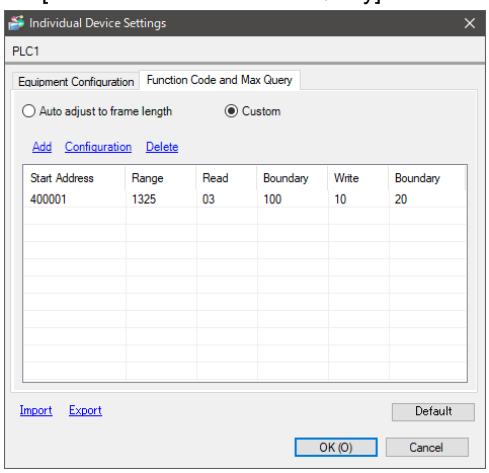

■ External Device Settings

Use the communication specification selection dip switch and module address selection rotary switch for communication settings of the External Device.

Please refer to the manual of the External Device for more details.

◆ Setup Items

- Communication specification selection dip switch

Dip Switch	Setting	Setup Description
SW1	OFF	Communication speed: 19200bps
SW2	ON	
SW3	OFF	Data bit: 8 bits Parity: None Stop bit: 1 bit
SW4	OFF	
SW5	ON	
SW6	OFF	Communication protocol: MODBUS specification
SW7	OFF	Not used. Leave it OFF.
SW8	OFF	

- Module address selection rotary switch

Setting	Setup Description
0	When setting the module address to 1, set it to 0. This is the same number as [Slave Equipment Address] in the Display.

4.31 Setting Example 31

■ GP-Pro EX Settings

◆ Communication Settings

To display the setup screen, from the [Project] menu, point to [System Settings] and select [Device/PLC].

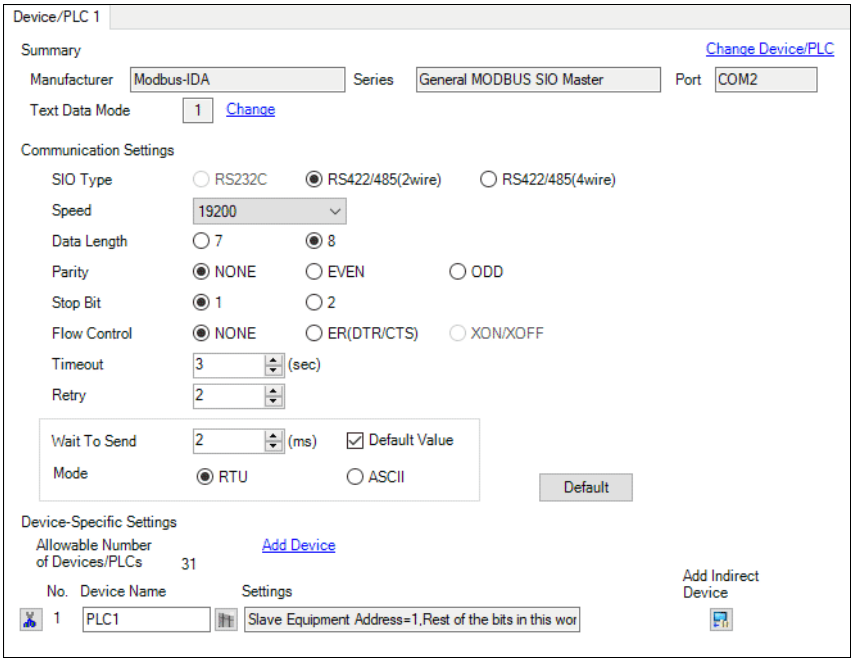

◆ Device Setting

To display the [Individual Device Settings] dialog box, from [Device-Specific Settings] in the [Device/PLC] window, select the external device and click [Settings] .

To connect multiple External Devices, from [Device-Specific Settings] in the [Device/PLC] window, click [Add Device] to add another External Device.

[Equipment Configuration] Tab

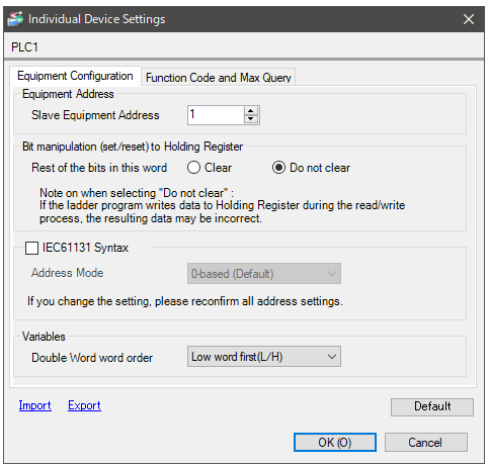

[Function Code and Max Query] Tab

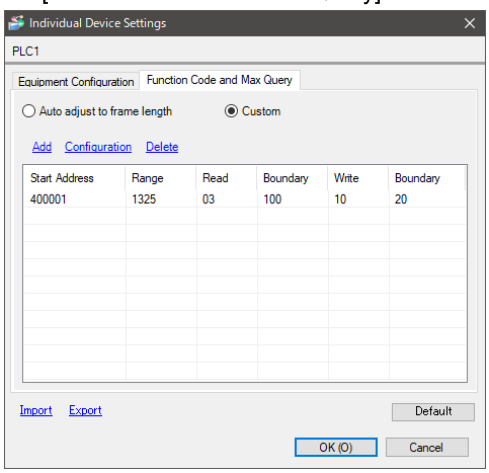

■ External Device Settings

Use the communication specification selection dip switch and module address selection rotary switch on the QTC1-4PT-RRRRMMMM-00 for communication settings of the External Device.
Please refer to the manual of the External Device for more details.

◆ Setup Items

- Communication specification selection dip switch

Dip Switch	Setting	Setup Description
SW1	OFF	Communication speed: 19200bps
SW2	ON	
SW3	OFF	Data bit: 8 bits Parity: None Stop bit: 1 bit
SW4	OFF	
SW5	ON	
SW6	OFF	Communication protocol: MODBUS specification
SW7	OFF	Not used. Leave it OFF.
SW8	OFF	

- Module address selection rotary switch

Setting	Setup Description
0	When setting the module address to 1, set it to 0. This is the same number as [Slave Equipment Address] in the Display.

4.32 Setting Example 32

■ GP-Pro EX Settings

◆ Communication Settings

To display the setup screen, from the [Project] menu, point to [System Settings] and select [Device/PLC].

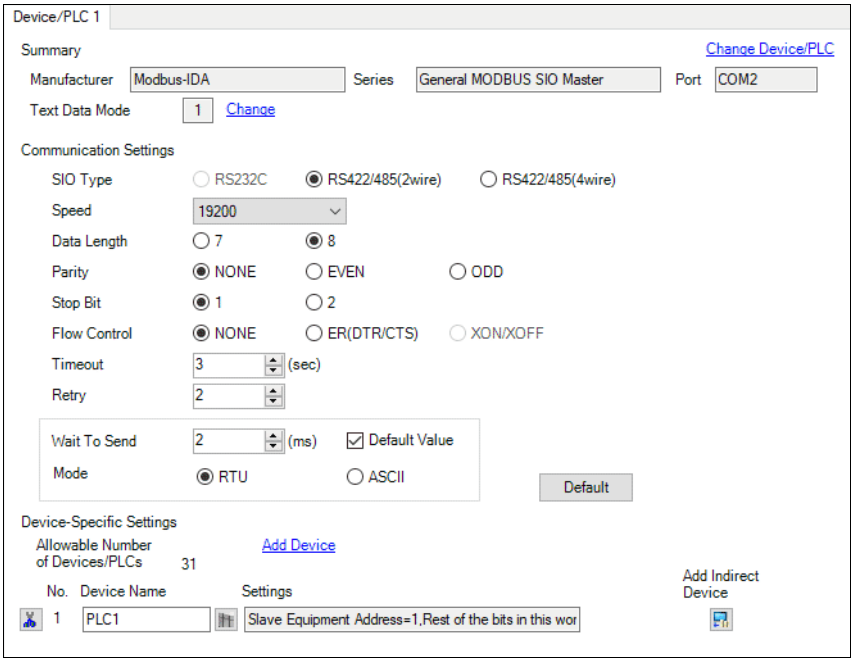

◆ Device Setting

To display the [Individual Device Settings] dialog box, from [Device-Specific Settings] in the [Device/PLC] window, select the external device and click [Settings] .

To connect multiple External Devices, from [Device-Specific Settings] in the [Device/PLC] window, click [Add Device] to add another External Device.

[Equipment Configuration] Tab

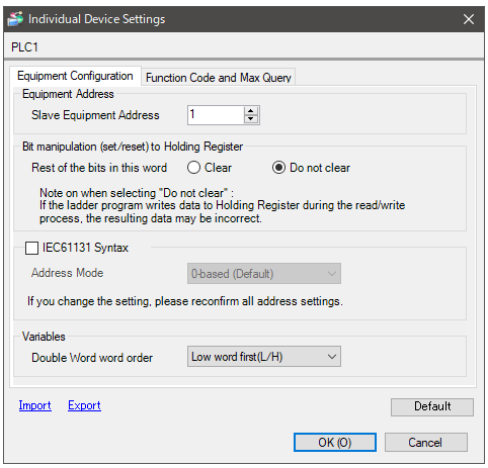

[Function Code and Max Query] Tab

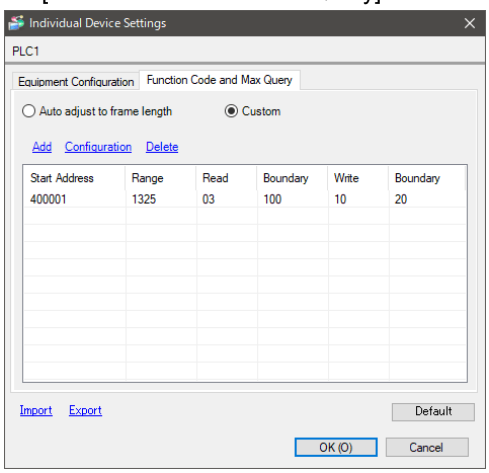

■ External Device Settings

Use the communication specification selection dip switch and module address selection rotary switch on the QMC1-C50-0 for communication settings of the External Device.
Please refer to the manual of the External Device for more details.

◆ Setup Items

- Communication specification selection dip switch

Dip Switch	Setting	Setup Description
SW1	ON	Communication speed: 19200bps
SW2	OFF	
SW3	OFF	Data bit: 8 bits
SW4	ON	Parity: None
SW5	OFF	Parity: Even
SW6	OFF	Stop bit: 1 bit
SW7	OFF	Not used. Leave it OFF.
SW8	OFF	

- Module address selection rotary switch

Setting	Setup Description
0	When setting the module address to 1, set it to 0. This is the same number as [Slave Equipment Address] in the Display.

4.33 Setting Example 33

■ GP-Pro EX Settings

◆ Communication Settings

To display the setup screen, from the [Project] menu, point to [System Settings] and select [Device/PLC].

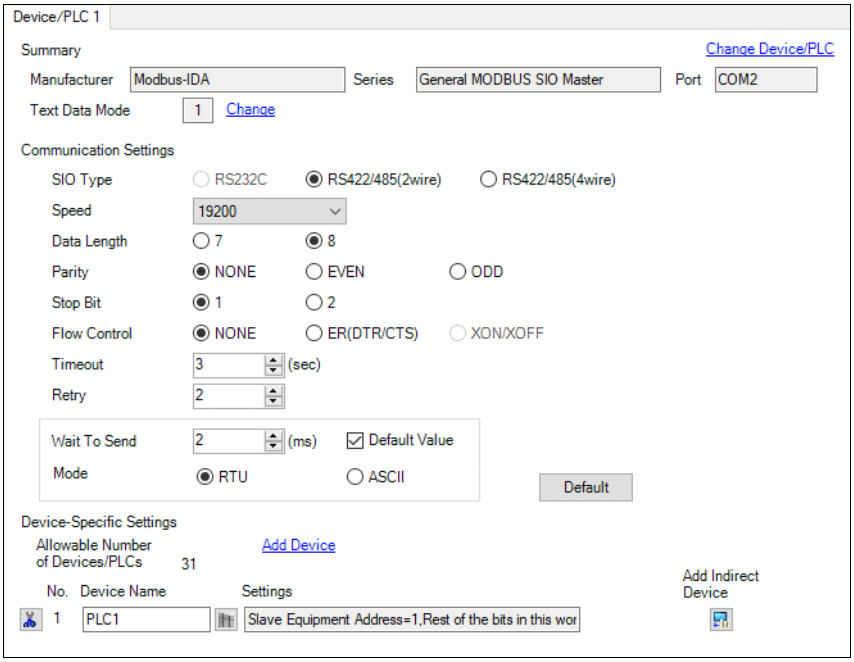

◆ Device Setting

To display the [Individual Device Settings] dialog box, from [Device-Specific Settings] in the [Device/PLC] window, select the external device and click [Settings] .

To connect multiple External Devices, from [Device-Specific Settings] in the [Device/PLC] window, click [Add Device] to add another External Device.

[Equipment Configuration] Tab

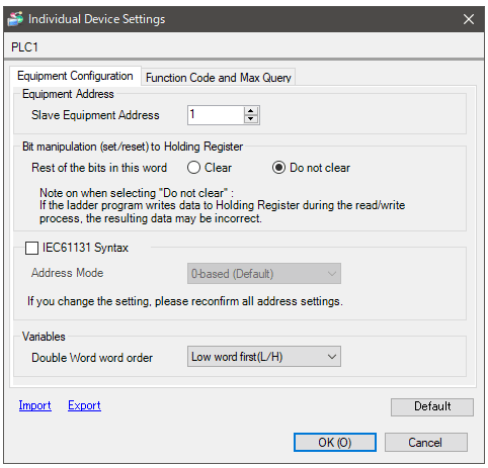

[Function Code and Max Query] Tab

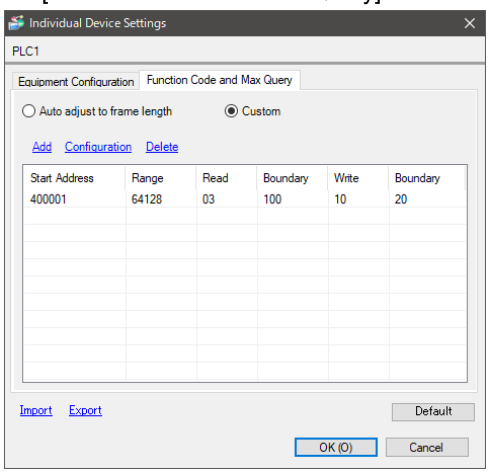

■ External Device Settings

Use the communication specification selection dip switch and module address selection rotary switch for communication settings of the External Device.
Please refer to the manual of the External Device for more details.

◆ Setup Items

- Communication specification selection dip switch

Dip Switch	Setting	Setup Description
SW1	ON	Communication speed: 19200bps
SW2	OFF	
SW3	OFF	Data bit: 8 bits
SW4	ON	Parity: None
SW5	OFF	Parity: Even
SW6	OFF	Stop bit: 1 bit
SW7	OFF	Not used. Leave it OFF.
SW8	OFF	

- Module address selection rotary switch

Setting	Setup Description
0	When setting the module address to 1, set it to 0. This is the same number as [Slave Equipment Address] in the Display.

5 Setup Items

Set up the Display's communication settings in GP-Pro EX or in the Display's offline mode.

The setting of each parameter must match that of the External Device.

☞"4 Communication Setting" (page 13)

5.1 Setup Items in GP-Pro EX

■ Communication Settings

To display the setup screen, from the [Project] menu, point to [System Settings] and select [Device/PLC].

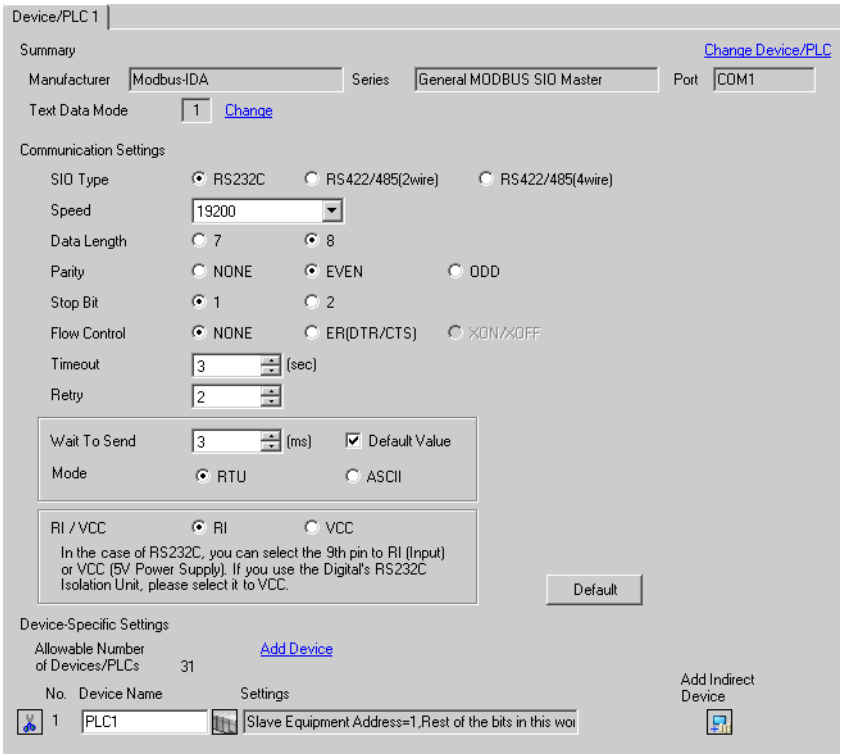

Setup Items	Setup Description
SIO Type	Select the SIO type for communicating with the External Device.
Speed	Select the communication speed between the External Device and the Display.
Data Length	Select a data length.
Parity	Select how to check parity.
Stop Bit	Select a stop bit length.
Flow Control	Select the communication control method to prevent overflow of transmission and reception data.
Timeout	Use an integer from 1 to 127 to enter the time(s) for which the Display waits for the response from the External Device.
Retry	In case of no response from the External Device, enter how many times the Display retransmits the command, from "0 to 255".

Setup Items	Setup Description
Wait To Send	Enter the standby time (ms) from when the Display receives packets until it transmits the next command, from "0 to 5000". When [RTU] is selected for [Mode] and the check box of the default value is checked, the Wait To Send value automatically changes according to the formula below by changing each value for Speed/Data Length/Parity/Stop Bit. $\text{Wait To Send (ms)} = \frac{3500 \times (1 + \text{Data Length} + \text{Stop Bit} + \text{Parity})}{\text{Speed (bps)}}$ Value for the parity setting is shown below. No Parity = 0 Parity Even = 1 Parity Odd = 1
Mode	Select either [RTU] or [ASCII] for the communication mode.
RI/VCC	You can switch between RI/VCC on the 9th pin when you select RS-232C for SIO type. To connect to the IPC, you need to switch between RI/5V using the IPC selector switch. Refer to your IPC manual for details.

NOTE

- Refer to the GP-Pro EX Reference Manual for Indirect Device.

  Cf. GP-Pro EX Reference Manual "Changing the Device/PLC at Runtime (Indirect Device)"

■ Device Setting

To display the [Individual Device Settings] dialog box, from [Device-Specific Settings] in the [Device/PLC] window, select the external device and click [Settings] .

To connect multiple External Devices, from [Device-Specific Settings] in the [Device/PLC] window, click [Add Device] to add another External Device.

- [Equipment Configuration] Tab

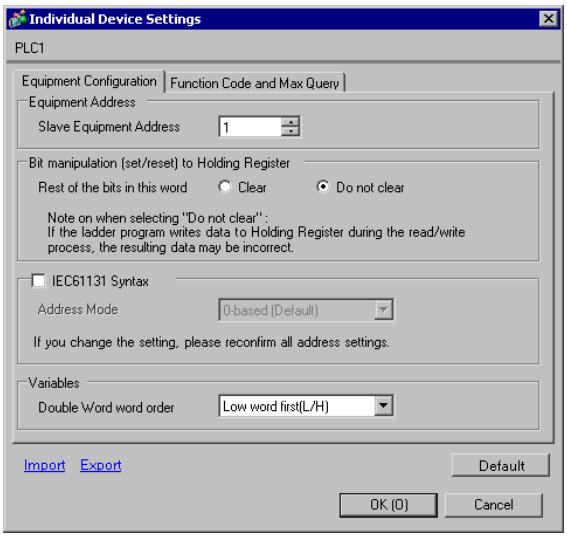

Setup Items	Setup Description
Slave Equipment Address	Use an integer from 1 to 247 to enter the slave address of the External Device.
Bit manipulation (set/reset) to Holding Register Rest of the bits in this word	Select how other bits in the same word are handled when you manipulate bits in the holding register, from "Clear" or "Do not clear".
IEC61131 Syntax	Select this item to use the IEC61131 syntax for variables. If you check this item, select the address mode from "0-based" or "1-based".
Double Word word order	Select the order of storing double word data from "Low word first" or "High word first".
Import	Import the device settings described in the xml file. ☞ " ◆ Import Procedure in the Device Setting" (page 85)
Export	Export the device settings into the xml file. ☞ " ◆ Export Procedure in the Device Setting" (page 85)

- [Function Code and Max Query] Tab (when "Auto adjust to frame length" is selected)

RTU mode

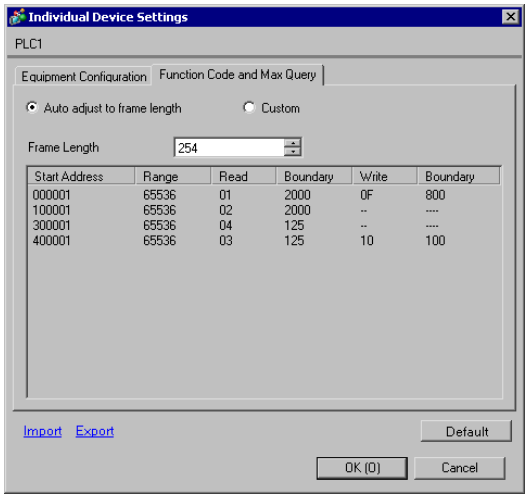

ASCII mode

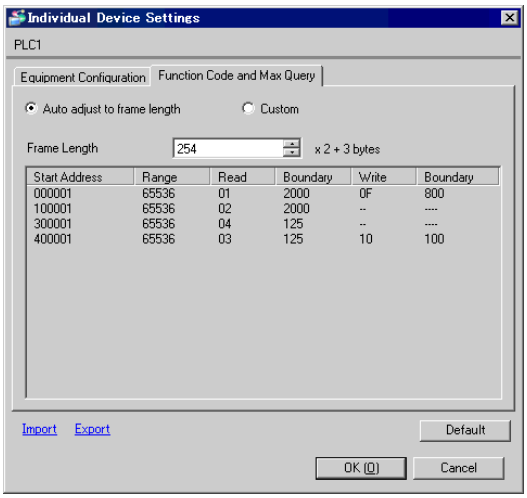

Setup Items	Setup Description
Auto adjust to frame length	Automatically set each function code and the boundary for one communication according to the frame length. Function codes cannot be changed. To change a function code, use "Custom".
Frame Length	Set the frame length from "6 to 254". After setting, click the device list to display the boundary of Read and Write. Specify the frame length so that the value can be within the range of the boundary of Read and Write for the external device to be used.
Import	Import the device settings described in the xml file. ☞ " ◆ Import Procedure in the Device Setting" (page 85)
Export	Export the device settings into the xml file. ☞ " ◆ Export Procedure in the Device Setting" (page 85)

NOTE

- When "Auto adjust to frame length" is selected, use the following function codes. The read/write boundary is automatically calculated according to "Frame Length".

Device	Function Code	
	Read	Write
Coil	01	0F: Force Multiple Coils
Discrete Input	02	Disabled
Input Register	04	Disabled
Holding Register	03	10: Preset Multiple Register

- Use "Custom" in the following cases:
  - When you use a different function code depending on an address.
  - When you use the function code "05: Force Single Coil" or "06: Preset Single Register".
  - When the read/write boundary depends on the device.

- [Function Code and Max Query] Tab (when "Custom" is selected)

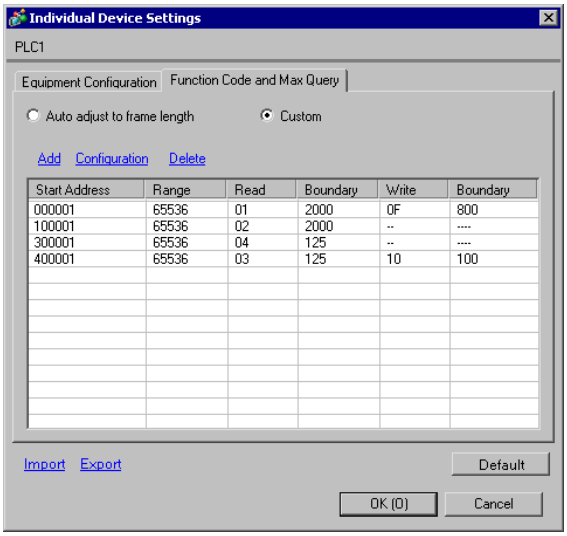

Setup Items	Setup Description
Custom	Manually set each function code and the boundary for one communication.
Add	Add the function code and its data boundary settings. Up to 20 settings can be added. Add the settings in the [Add setting] dialog box.
Configuration	Change the selected device settings. Change the settings in the [Configuration setting] dialog box.
Delete	Delete the selected device settings.
Import	Import the device settings described in the xml file. ☞ " ◆ Import Procedure in the Device Setting" (page 85)
Export	Export the device settings into the xml file. ☞ " ◆ Export Procedure in the Device Setting" (page 85)

- [Add setting] Dialog Box / [Configuration setting] Dialog Box

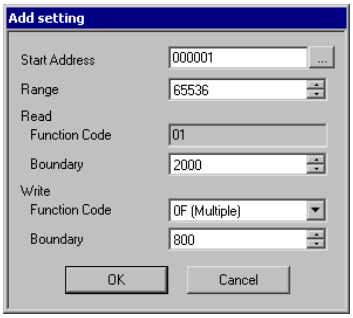

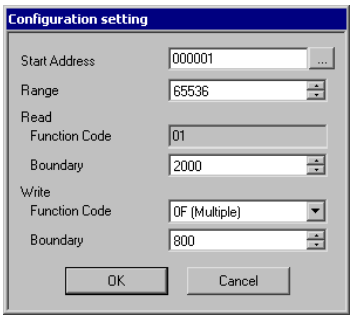

Setup Items		Setup Description
Start Address		Set the start address of the device.
Range		Set the range of the device specified in the start address.
Read		Set the function codes to be used for read and the read boundary in one communication.
	Function Code	The function code is assigned by the specified start address.
	Boundary	The boundary depends on the device. Refer to the following table for details.
Write		Set the function code to be used for write and the write boundary in one communication.
	Function Code	The function code depends on the device. Refer to the following table for details.
	Boundary	The boundary depends on the device. Refer to the following table for details.

NOTE

- When "Custom" is selected, use the following function codes.

Device	Function Code (Boundary)		
	Read	Write	
		Multiple	Single
Coil	01(2000)	0F: Force Multiple Coils (800)	05: Force Single Coil (Fixed to 1)
Discrete Input	02(2000)	Disabled	Disabled
Input Register	04(125)	Disabled	Disabled
Holding Register	03(125)	10: Preset Multiple Register (100)	06: Preset Single Register (Fixed to 1)

- If the set device address is disabled to write, you cannot set the write function code and boundary.
- When you select the function code "05" or "06", the write boundary will be fixed to "1", and cannot be changed.

◆ Import Procedure in the Device Setting

1 Create the xml file based on the following format sample.

- Format sample when "Auto adjust to frame length" is selected

```
<?xml version="1.0" encoding="utf-8" ?>
<ModbusConfiguration version="1">
 <ClearBits>OFF</ClearBits>
 <AddressMode>ModiconSyntax</AddressMode>
 <DWORD>L/H</DWORD>
 <FunctionCode>
  <Mode>AutoAdjust</Mode>
  <FrameLength>254</FrameLength>
 </FunctionCode>
</ModbusConfiguration>
```

Bit manipulation to Holding Register
Address Mode
Double Word word order

Mode
Frame Length

- Format sample when "Custom" is selected

```
<?xml version="1.0" encoding="utf-8" ?>
<ModbusConfiguration version="1">
 <ClearBits>OFF</ClearBits>
 <AddressMode>ModiconSyntax</AddressMode>
 <DWORD>L/H</DWORD>
 <FunctionCode>
  <Mode>Custom</Mode>
  <Setting>
   <Address>000001</Address>
   <Range>65535</Range>
   <Read>
    <FunctionCode>01</FunctionCode>
    <Boundary>2000</Boundary>
   </Read>
   <Write>
    <FunctionCode>0F</FunctionCode>
    <Boundary>800</Boundary>
   </Write>
  </Setting>
 </FunctionCode>
</ModbusConfiguration>
```

Bit manipulation to Holding Register
Address Mode
Double Word word order

Mode

Start Address
Range

Read Function Code
Read Boundary

Write Function Code
Write Boundary

2 Click [Import] on the [Individual Device Settings] dialog box to display the [Open] dialog box.

3 Select the created xml file and click [Open].

◆ Export Procedure in the Device Setting

1 Click [Export] on the [Individual Device Settings] dialog box to display the [Save as] dialog box.

2 Enter a name and click [Save].

5.2 Setup Items in Offline Mode

NOTE

- Refer to the Maintenance/Troubleshooting guide for information on how to enter offline mode or about the operation.

  Cf. Maintenance/Troubleshooting Guide "Offline Mode"

- The number of the setup items to be displayed for 1 page in the offline mode depends on the Display in use. Please refer to the Reference manual for details.

◆ Communication Settings

To display the setting screen, touch [Device/PLC Settings] from [Peripheral Equipment Settings] in offline mode. Touch the External Device you want to set from the displayed list.

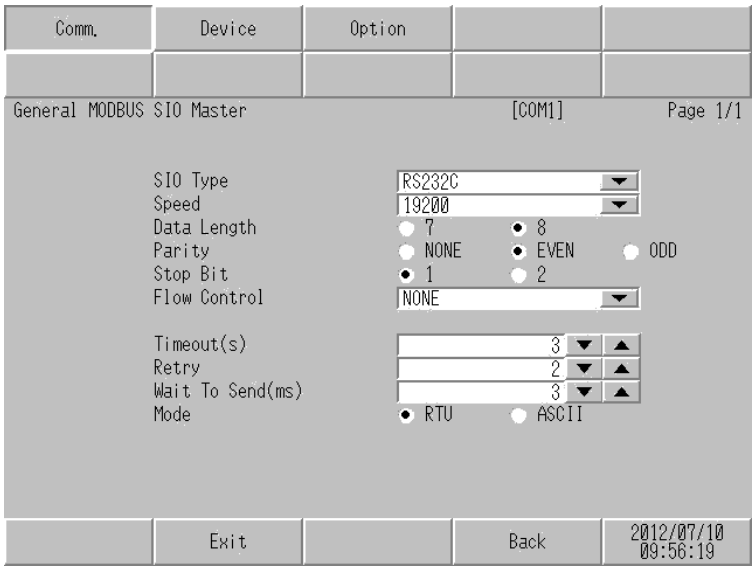

Setup Items	Setup Description
SIO Type	Select the SIO type for communicating with the External Device. IMPORTANT In the communication settings, set [SIO Type] correctly according to the serial interface specifications of the Display. If you select an SIO type that the serial interface does not support, proper operation cannot be guaranteed. Refer to your Display manual for details on the serial interface specifications.
Speed	Select the communication speed between the External Device and the Display.
Data Length	Select a data length.
Parity	Select how to check parity.
Stop Bit	Select a stop bit length.
Flow Control	Select the communication control method to prevent overflow of transmission and reception data.

Setup Items	Setup Description
Timeout	Use an integer from 1 to 127 to enter the time (s) for which the Display waits for the response from the External Device.
Retry	In case of no response from the External Device, enter how many times the Display retransmits the command, from "0 to 255".
Wait To Send	Enter the standby time (ms) from when the Display receives packets until it transmits the next command, from "0 to 5000". When [RTU] is selected for [Mode] and each value for Speed/Data Length/Parity/Stop Bit is changed, set the Wait To Send value calculated with the following formula. $\text{Wait To Send (ms)} = \frac{3500 \times (1 + \text{Data Length} + \text{Stop Bit} + \text{Parity})}{\text{Speed (bps)}}$ Value for the parity setting is shown below. No Parity = 0 Parity Even = 1 Parity Odd = 1
Mode	Select either [RTU] or [ASCII] for the communication mode.

◆ Device Setting

To display the setting screen, touch [Device/PLC Settings] from [Peripheral Equipment Settings]. Touch the External Device you want to set from the displayed list, and touch [Device].

(Page 1/22)

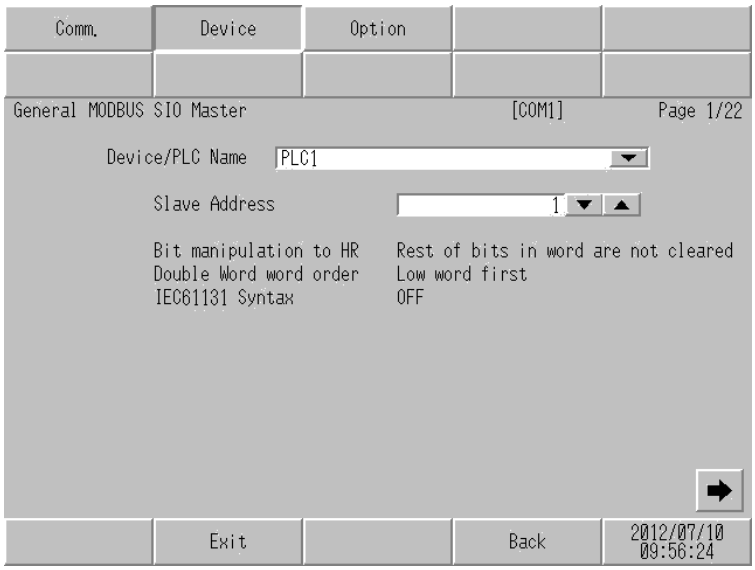

Setup Items	Setup Description
Device/PLC Name	Select the External Device to set. The device name is the title of the External Device set with GP-Pro EX.(Initial value [PLC1])
Slave Address	Use an integer from 1 to 247 to enter the slave address of the External Device.
Bit manipulation to HR	Displays how other bits in the same word are handled when you manipulate bits in the holding register, as "Rest of bits in word are cleared" or "Rest of bits in word are not cleared". (Not available to set in offline mode.)

Setup Items	Setup Description
Double Word word order	Displays the currently set order of storing double word data as "Low word first" or "High word first". (Not available to set in offline mode.)
IEC61131 Syntax	Displays the usage status of the currently set IEC61131 syntax in ON/OFF. (Not available in offline mode.)

(Page 2/22)

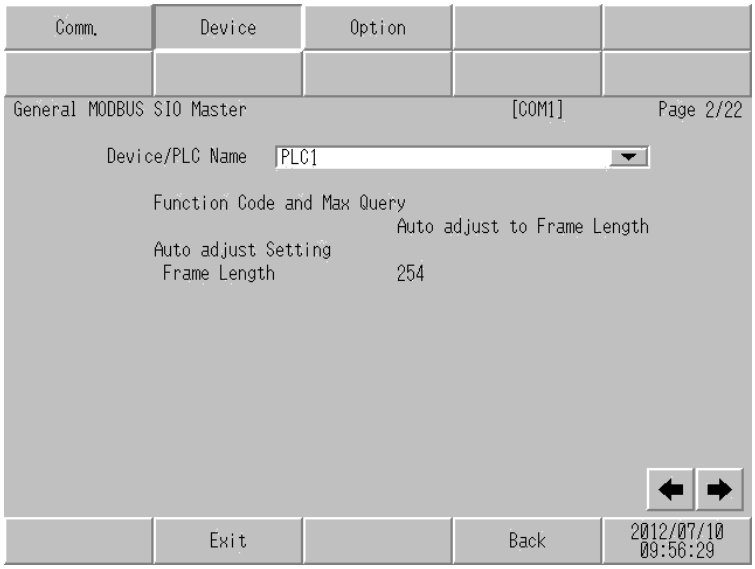

Setup Items	Setup Description
Device/PLC Name	Select the External Device to set. The device name is the title of the External Device set with GP-Pro EX.(Initial value [PLC1])
Function Code and Max Query	Displays the option to set the function code and boundary. (Not available to set in offline mode.)
Auto adjust Setting Frame Length	Displays the set frame length when "Auto adjust to frame length" is selected in the online mode. (Not available to set in offline mode.)

NOTE

- When "Custom" is selected, the setup items of the frame length are invalid.

(Page 3/22 to 22/22)

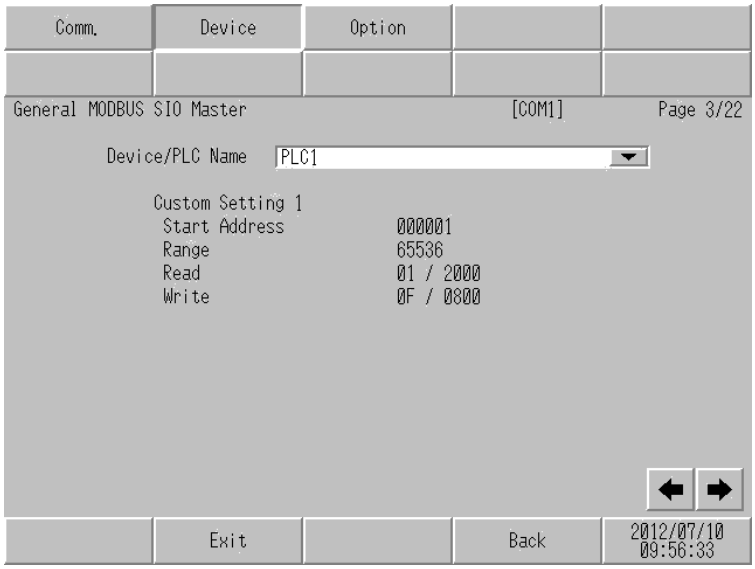

Setup Items	Setup Description
Device/PLC Name	Select the External Device to set. The device name is the title of the External Device set with GP-Pro EX. (Initial value [PLC1])
Start Address	Displays the start address of the device. (Not available to set in offline mode.)
Range	Displays the range of the device specified in the start address. (Not available to set in offline mode.)
Read	Displays the device function codes and boundaries to be read for one communication. (Not available to set in offline mode.)
Write	Displays the device function codes and boundaries to be written for one communication. (Not available to set in offline mode.)

NOTE

- Page 3 and the following pages display the set descriptions in order.
- When "Auto adjust to frame length" is selected, the Custom setup items are invalid.

◆ Option

To display the setting screen, touch [Device/PLC Settings] from [Peripheral Equipment Settings]. Touch the External Device you want to set from the displayed list, and touch [Option].

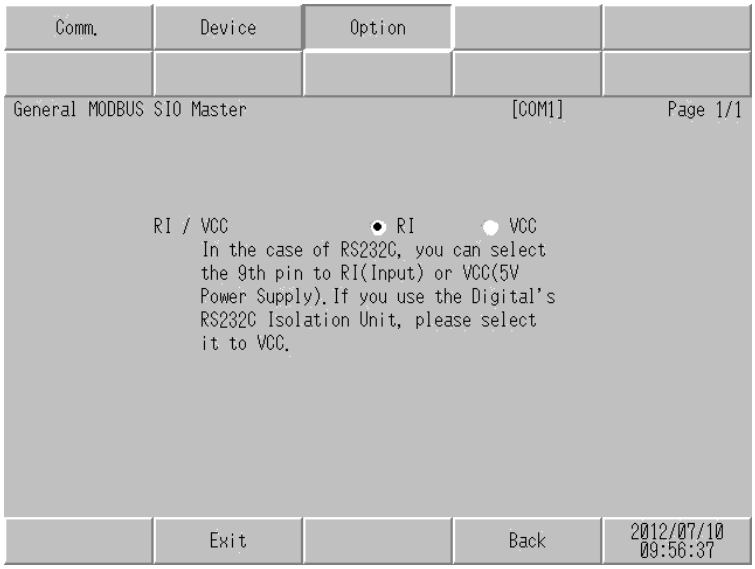

Setup Items	Setup Description
RI/VCC	You can switch between RI/VCC on the 9th pin when you select RS-232C for SIO type. To connect to the IPC, you need to switch between RI/5V using the IPC selector switch. Refer to your IPC manual for details.

NOTE

- GP-4100 series, GP-4*01TM, GP-Rear Module, LT-4*01TM and LT-Rear Module do not have the [Option] setting in the offline mode.

6 Cable Diagrams

The following cable diagrams may be different from cable diagrams recommended by External Device Manufacturer.

Please be assured there is no operational problem in applying the cable diagram shown in this manual.

- The FG pin of the External Device body must be grounded according to your country's applicable standard. Refer to your External Device manual for details.
- SG and FG are connected inside the Display. When connecting the External Device to SG, design your system to avoid short-circuit loops.
- Connect an isolation unit if the communication is not stable due to noise or other factors.
- The connector type or signal name may vary depending on the External Device.
  Connect correctly corresponding to the External Device interface specifications.

6.1 Cable Diagram 1

Display (Connection Port)	Cable		Remarks
GP3000 (COM1) GP4000*1 (COM1) GP6000 (COM1) SP5000*2 (COM1/2) SP-5B00 (COM1) ST3000 (COM1) ST6000 (COM1) STM6000 (COM1) STC6000 (COM1) ET6000 (COM1) LT3000 (COM1) IPC*3 PC/AT	1A	User created cable (ER (DTR/CTS) control)	The cable length must be 15m maximum.
	1B	User created cable (without control)	
GP-4105 (COM1) GP-4115T (COM1) GP-4115T3 (COM1)	1C	User created cable (ER (DTR/CTS) control)	The cable length must be 15m maximum.
	1D	User created cable (without control)	
LT-4*01TM (COM1) LT-Rear Module (COM1)	1E	RJ45 RS-232C Cable (5m) by Pro-face PFXZLMCBRJR21	The cable length must be 5m maximum.

*1 All GP4000 models except GP-4100 series and GP-4203T

*2 Except SP-5B00

*3 Only the COM port which can communicate by RS-232C can be used.
■ IPC COM Port (page 9)

1A)

- When the External Device supports RTS/CTS control

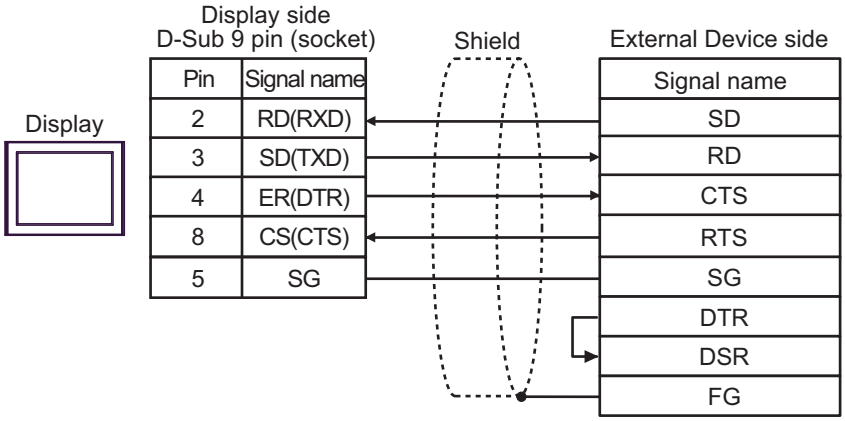

- When the External Device supports DTR/DSR control

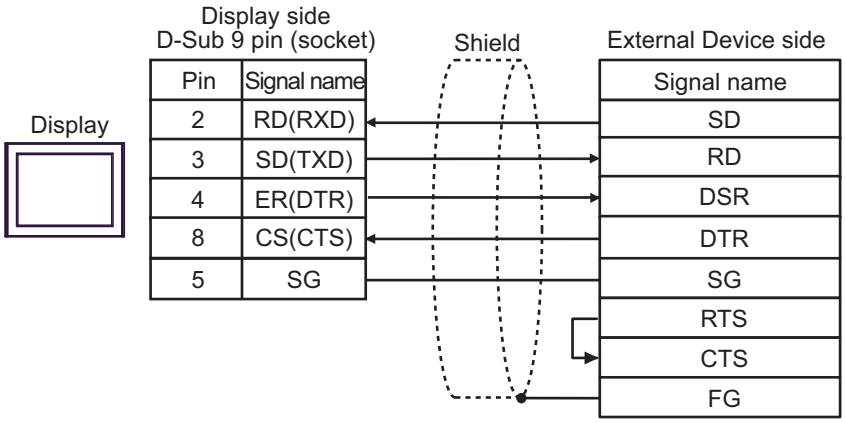

NOTE
- The cable length must be 15m maximum.

1B)

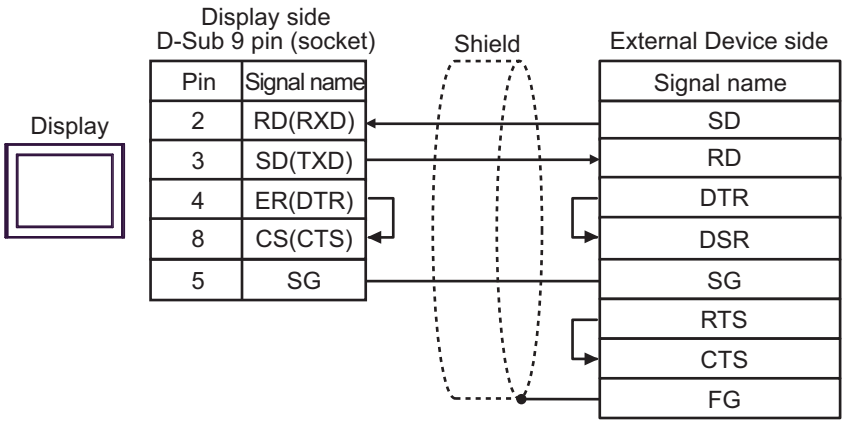

NOTE
- The cable length must be 15m maximum.

1C)

- When the External Device supports RTS/CTS control

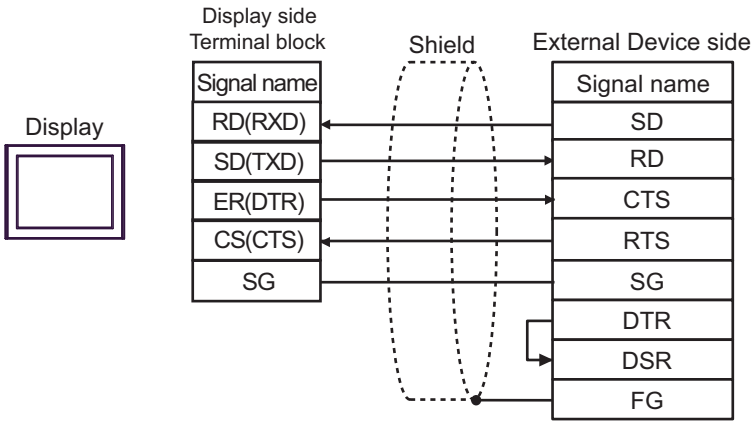

- When the External Device supports DTR/DSR control

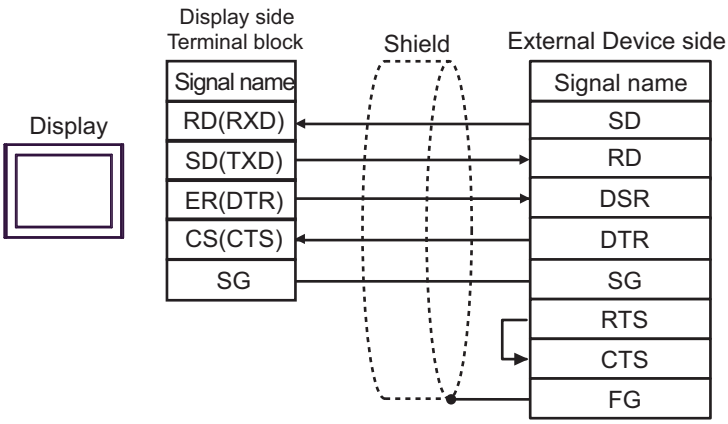

NOTE
- The cable length must be 15m maximum.

1D)

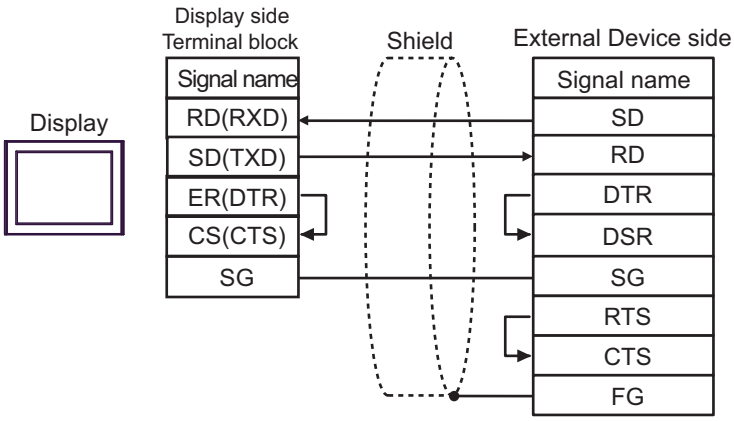

NOTE
- The cable length must be 15m maximum.

1E)

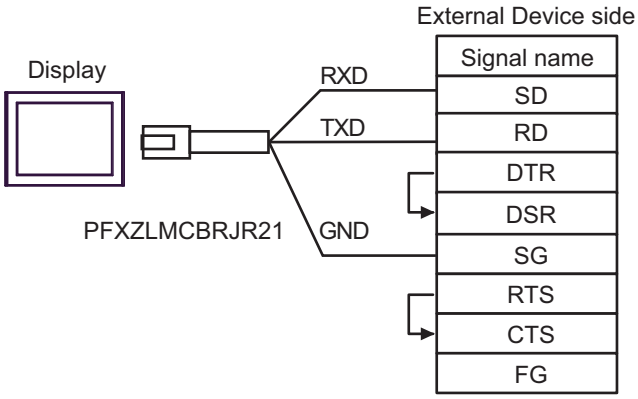

NOTE
- The cable length must be 5m maximum.

6.2 Cable Diagram 2

Display (Connection Port)	Cable		Remarks
GP3000*1 (COM1) AGP-3302B (COM2) GP-4*01TM (COM1) GP-Rear Module (COM1) ST3000*2 (COM2) LT3000 (COM1) IPC*3	2A	COM port conversion adapter by Pro-face CA3-ADPCOM-01 + Connector terminal block conversion adapter by Pro-face CA3-ADPTRM-01 + User created cable	The cable length must be 1000m maximum.
	2B	COM port conversion adapter by Pro-face CA3-ADPCOM-01 + RS-422 cable by Pro-face CA3-CBL422-01	
	2C	User created cable	
GP3000*4 (COM2)	2D	Online adapter by Pro-face CA4-ADPONL-01 + Connector terminal block conversion adapter by Pro-face CA3-ADPTRM-01 + User created cable	The cable length must be 1000m maximum.
	2E	Online adapter by Pro-face CA4-ADPONL-01 + RS-422 cable by Pro-face CA3-CBL422-01	
	2F	Online adapter by Pro-face CA4-ADPONL-01 + User created cable	
GP-4106 (COM1) GP-4116T (COM1)	2G	User created cable	The cable length must be 1000m maximum.
GP4000*5 (COM2) GP-4201T (COM1) GP6000 (COM2) SP5000*6 (COM1/2) SP-5B00 (COM2) ST6000*7 (COM2) ST-6200 (COM1) STM6000 (COM1) STC6000 (COM1) ET6000*8 (COM2) PS6000 (Basic Box) (COM1/2)	2H	RS-422 terminal block conversion adapter by Pro-face PFXZCBADTM1*9 + User created cable	The cable length must be 1000m maximum.
	2B	COM port conversion adapter by Pro-face CA3-ADPCOM-01 + RS-422 cable by Pro-face CA3-CBL422-01	
	2C	User created cable	
PE-4000B*10 PS5000*10 PS6000 (Optional Interface)*10	2I	User created cable	The cable length must be 1000m maximum.

*1 All GP3000 models except AGP-3302B

*2 Except AST-3211A and AST-3302B

*3 Only the COM port which can communicate by RS-422/485 (4 wire) can be used. (Except PE-4000B, PS5000, and PS6000)
■ IPC COM Port (page 9)

*4 All GP3000 models except GP-3200 series and AGP-3302B

*5 All GP4000 models except GP-4100 series, GP-4*01TM, GP-Rear Module, GP-4201T and GP-4*03T

*6 Except SP-5B00

*7 Except ST-6200

*8 Due to the COM port specifications, flow control is not possible. Omit wiring the control pins on the Display side of the cable diagram.

*9 When using a Terminal Block Conversion Adapter (CA3-ADPTRM-01) instead of the RS-422 Terminal Block Conversion Adapter, refer to Cable Diagram 2A.

*10 Only the COM port which can communicate by RS-422/485 (4 wire) can be used.
■ IPC COM Port (page 9)

IMPORTANT

- The RS-422/485 cable length is normally 1000m or less, which depends on the External Device. Please refer to the manual of the External Device for more details.
- The connection method and termination resistance depends on the External Device.
- The termination resistance on the Display is not isolated.

2A)

- 1:1 Connection

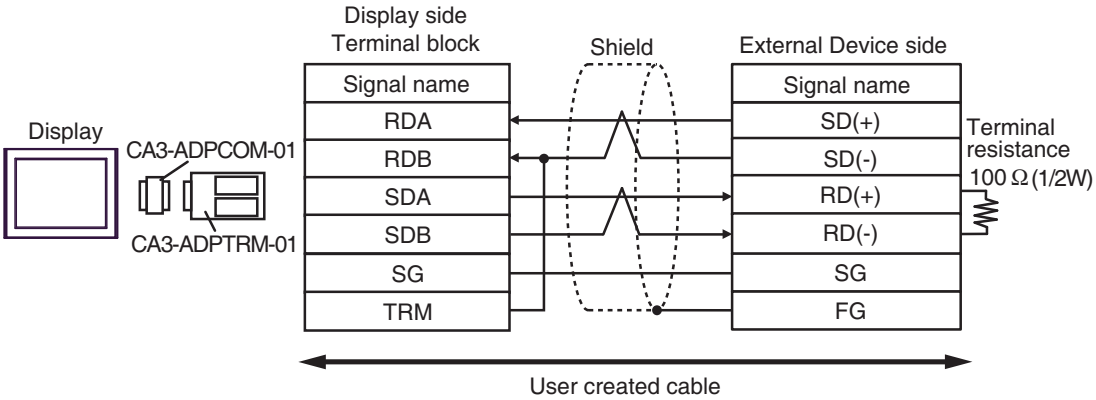

- 1:n Connection

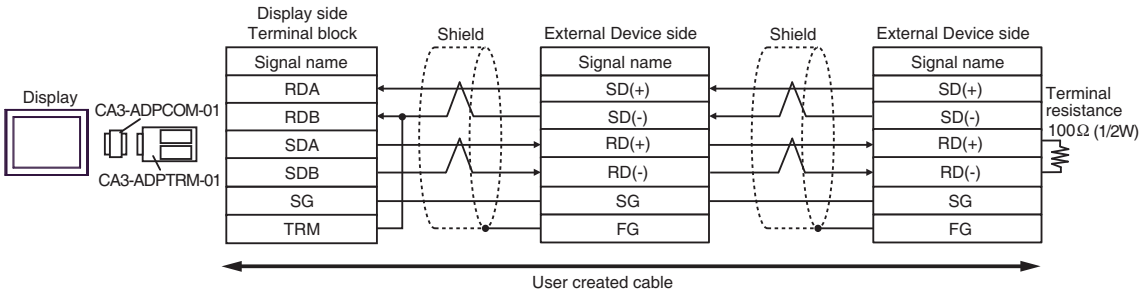

NOTE

- When the RDB terminal of CA3-ADPTRM-01 to the TRM terminal, the termination resistance of 100Ω (1/2W) is inserted between RDA and RDB terminals on the Display.

2B)

- 1:1 Connection

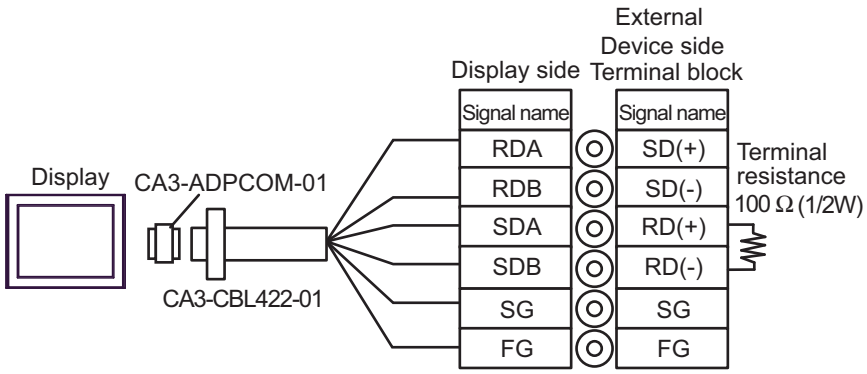

- 1:n Connection

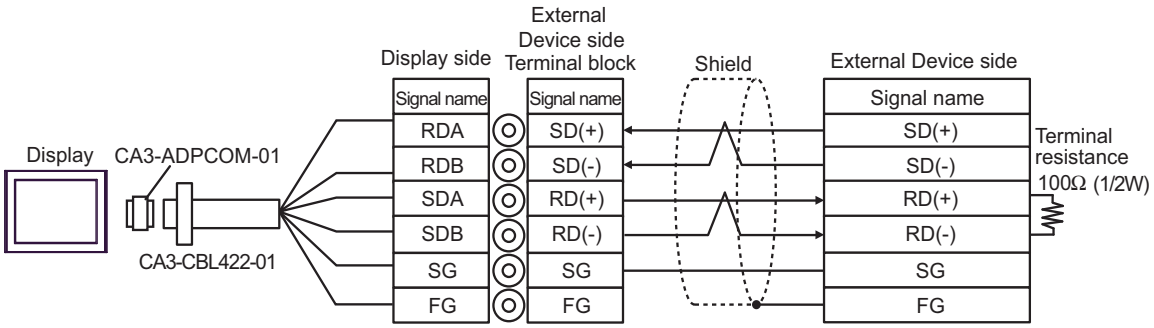

NOTE

- 100Ω (1/2W) termination resistance is inserted between RDA and RDB in CA3-CBL422-01.

2C)

- 1:1 Connection

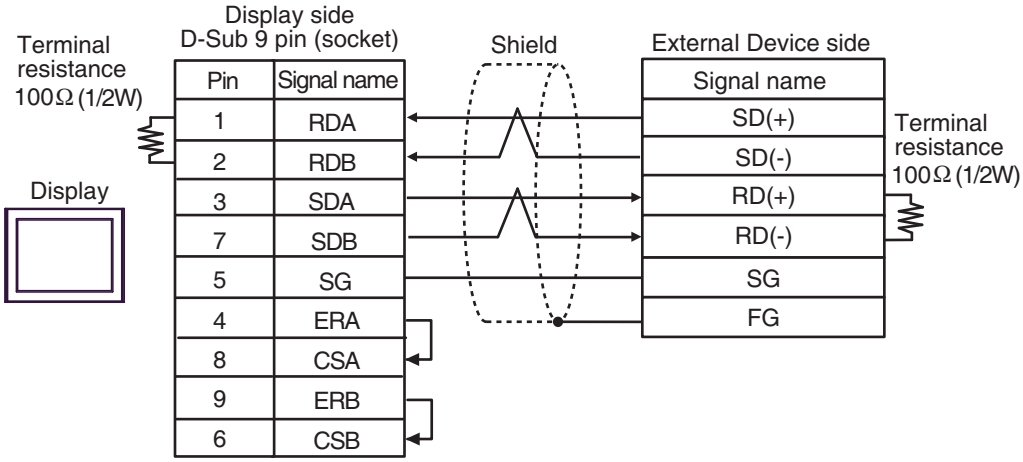

- 1:n Connection

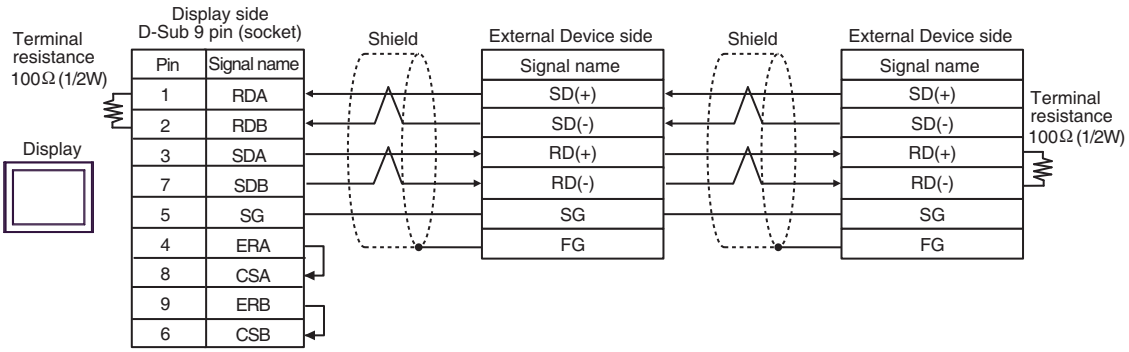

2D)

- 1:1 Connection

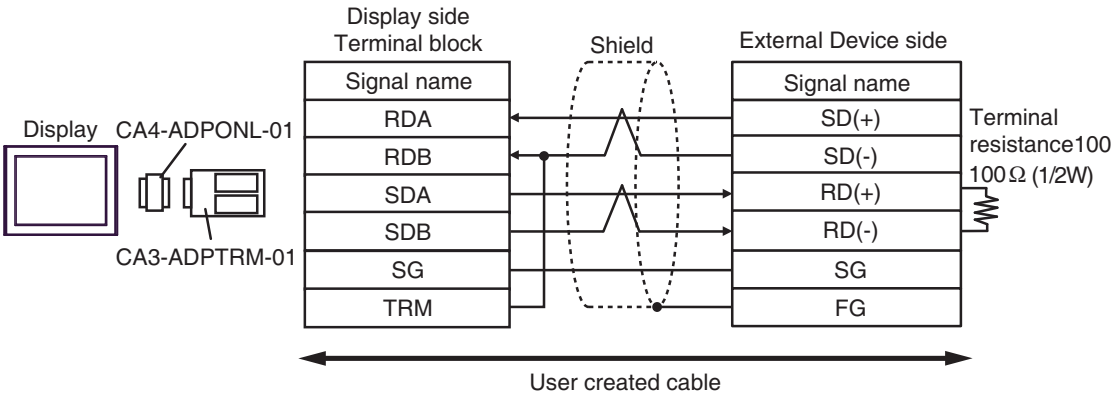

- 1:n Connection

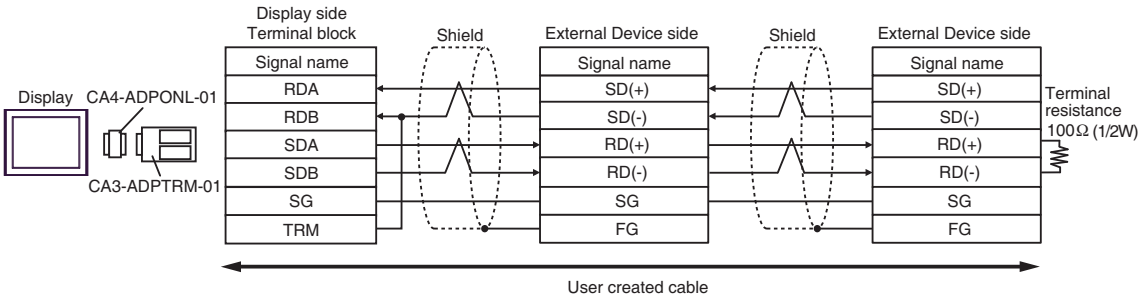

NOTE

- When the RDB terminal of CA3-ADPTRM-01 to the TRM terminal, the termination resistance of 100Ω (1/2W) is inserted between RDA and RDB terminals on the Display.

2E)

- 1:1 Connection

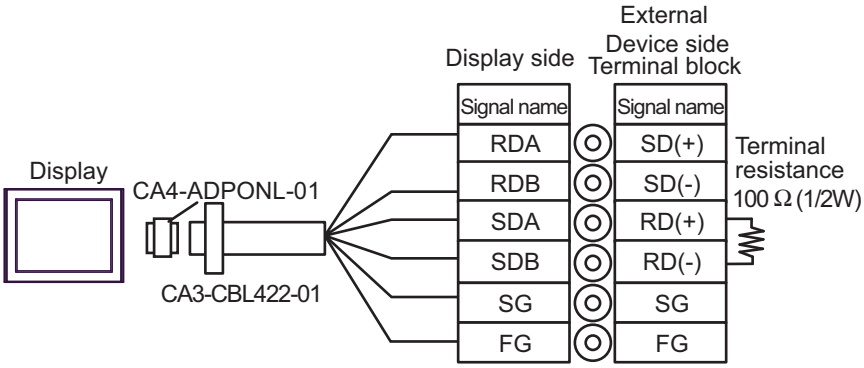

- 1:n Connection

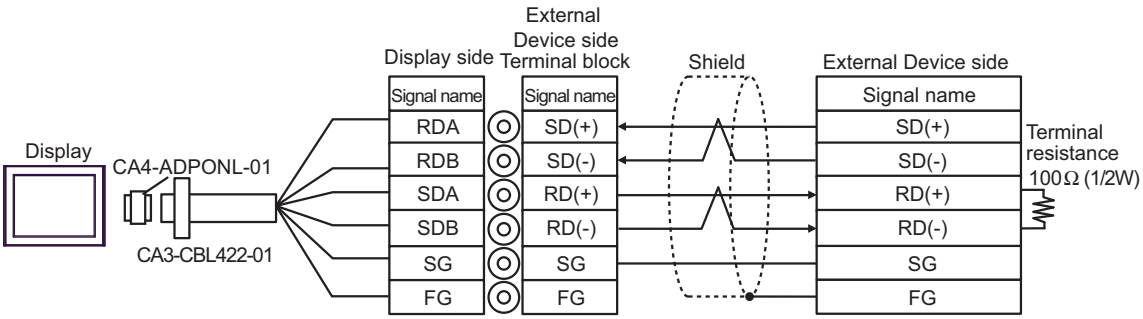

NOTE

- 100Ω (1/2W) termination resistance is inserted between RDA and RDB in CA3-CBL422-01.

2F)

- 1:1 Connection

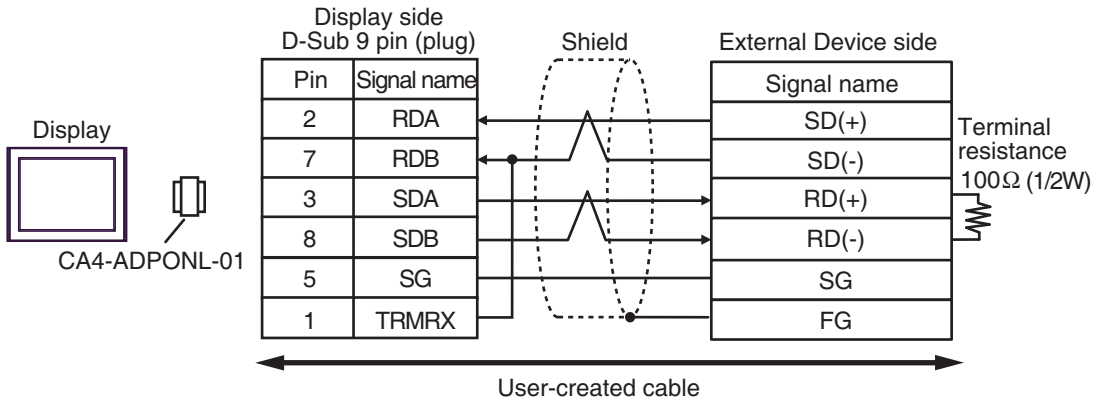

- 1:n Connection

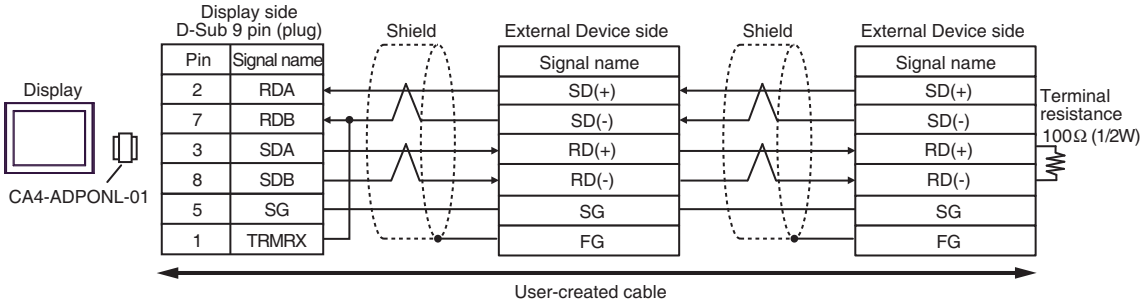

NOTE

- When the RDB terminal of CA4-ADPONL-01 to the TRMRX terminal, the termination resistance of 100Ω (1/2W) is inserted between RDA and RDB terminals on the Display.

2G)

- 1:1 Connection

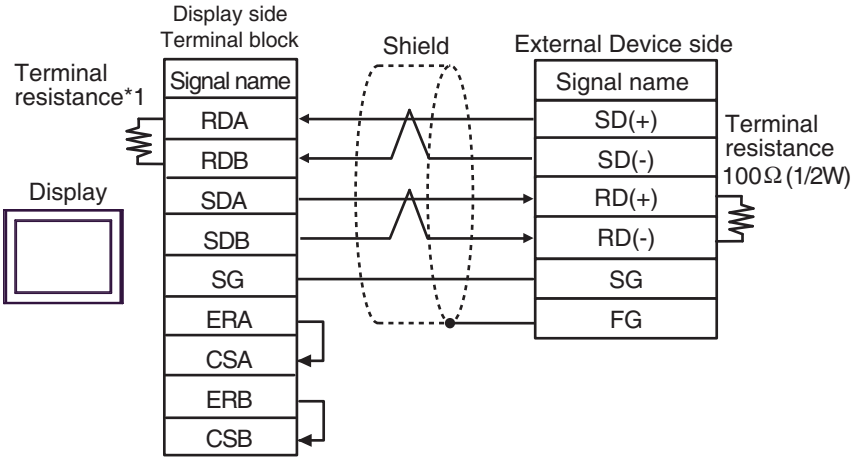

- 1:n Connection

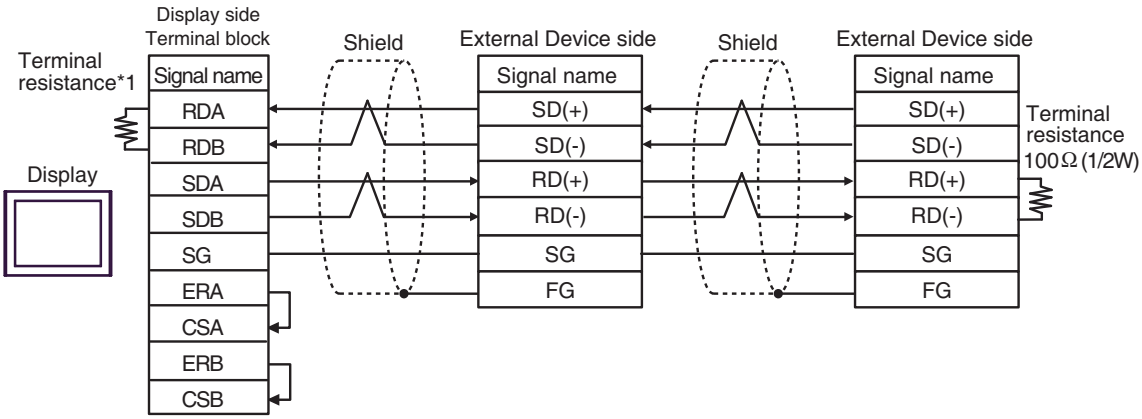

*1 The resistance in the Display is used as the termination resistance. Set the value of the DIP Switch on the rear of the Display as shown in the table below.

DIP Switch No.	Set Value
1	OFF
2	OFF
3	ON
4	ON

2H)

- 1:1 Connection

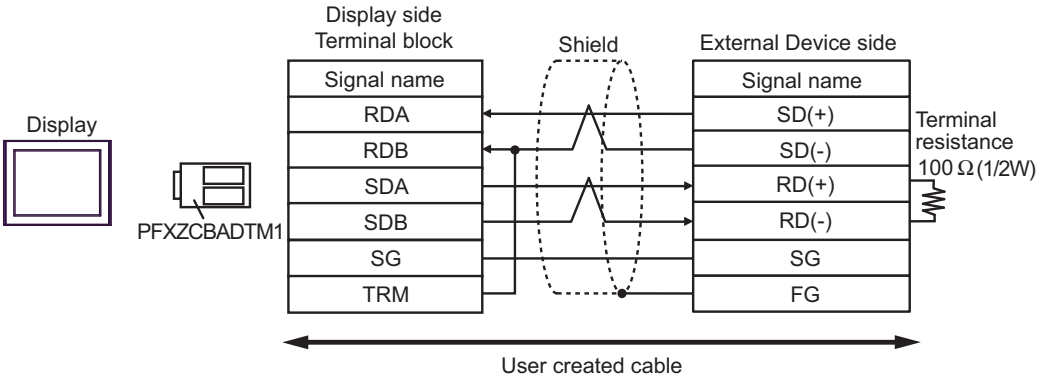

- 1:n Connection

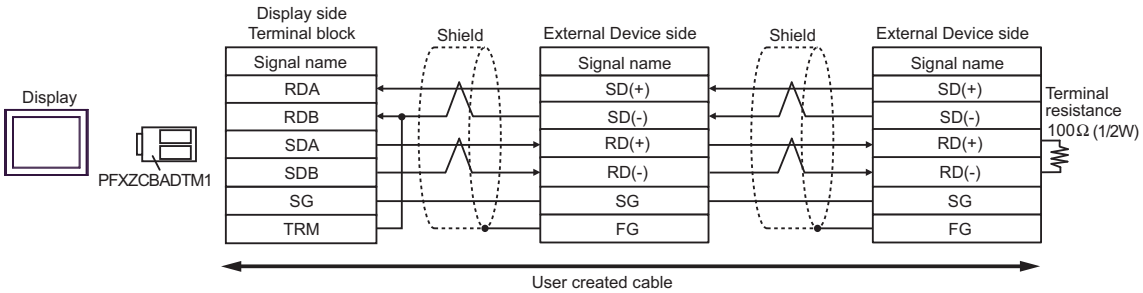

NOTE

- When the RDB terminal of PFXZCBADTM1 to the TRM terminal, the termination resistance of 100Ω (1/2W) is inserted between RDA and RDB terminals on the Display.

2l)

- 1:1 Connection

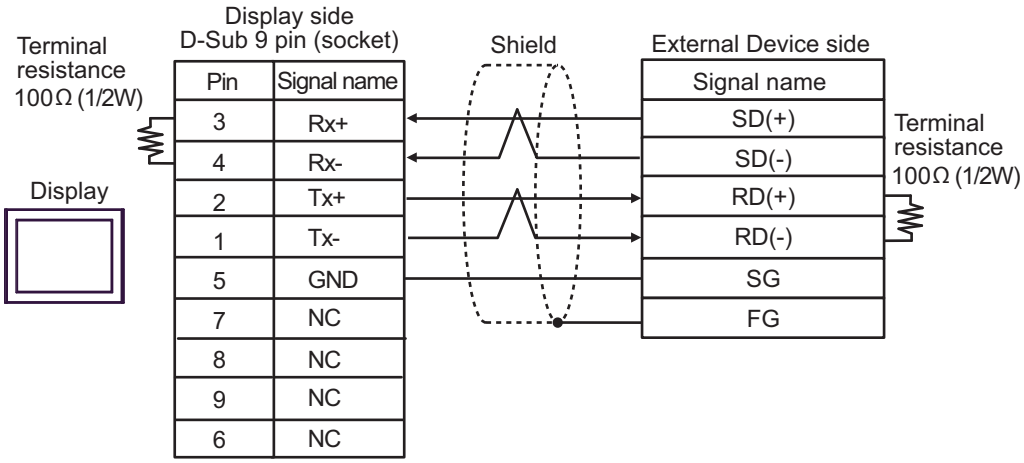

- 1:n Connection

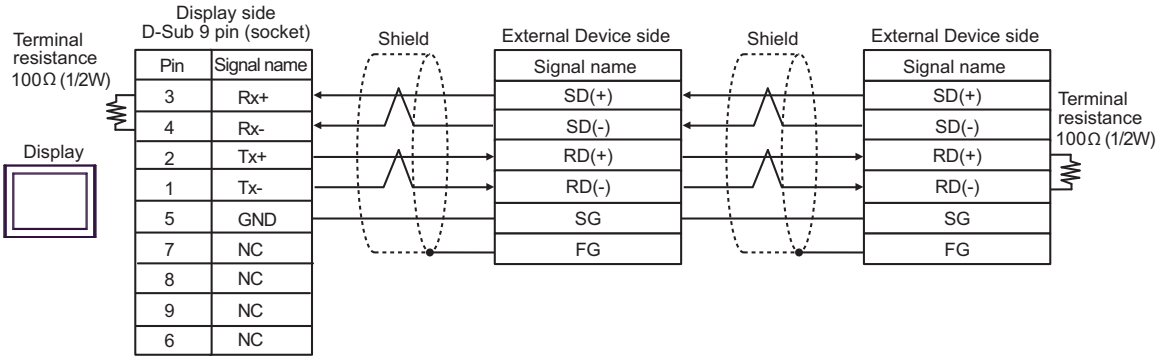

6.3 Cable Diagram 3

Display (Connection Port)	Cable		Remarks
GP3000*1 (COM1) AGP-3302B (COM2) GP-4*01TM (COM1) GP-Rear Module (COM1) ST3000*2 (COM2) LT3000 (COM1)	3A	COM Port Conversion Adapter by Pro-face CA3-ADPCOM-01 + Terminal Block Conversion Adapter by Pro-face CA3-ADPTRM-01 + User created cable	The cable length must be 1000m maximum.
	3B	User created cable	
GP3000*3 (COM2)	3C	Online adapter by Pro-face CA4-ADPONL-01 + Connector terminal block conversion adapter by Pro-face CA3-ADPTRM-01 + User created cable	The cable length must be 1000m maximum.
	3D	Online adapter by Pro-face CA4-ADPONL-01 + User created cable	
IPC*4	3E	COM Port Conversion Adapter by Pro-face CA3-ADPCOM-01 + Terminal Block Conversion Adapter by Pro-face CA3-ADPTRM-01 + User created cable	The cable length must be 1000m maximum.
	3F	User created cable	
GP-4106 (COM1) GP-4116T (COM1)	3G	User created cable	The cable length must be 1000m maximum.
GP-4107 (COM1) GP-4*03T*5 (COM2) GP-4203T (COM1)	3H	User created cable	The cable length must be 1000m maximum.
GP4000*6 (COM2) GP-4201T (COM1) GP6000 (COM2) SP5000*7 (COM1/2) SP-5B00 (COM2) ST6000*8 (COM2) ST-6200 (COM1) STM6000 (COM1) STC6000 (COM1) ET6000*9 (COM2) PS6000 (Basic Box) (COM1/2)	3I	RS-422 terminal block conversion adapter by Pro-face PFXZCBADTM1*10 + User created cable	The cable length must be 1000m maximum.
	3B	User created cable	

Display (Connection Port)	Cable		Remarks
LT-4*01TM (COM1) LT-Rear Module (COM1)	3J	RJ45 RS-485 Cable (5m) by Pro-face PFXZLMCBRJR81	The cable length must be 200m maximum.
PE-4000B*11 PS5000*11 PS6000 (Optional Interface)*11	3K	User created cable	The cable length must be 1000m maximum.

*1 All GP3000 models except AGP-3302B

*2 Except AST-3211A and AST-3302B

*3 All GP3000 models except GP-3200 series and AGP-3302B

*4 Only the COM port which can communicate by RS-422/485 (2 wire) can be used. (Except PE-4000B, PS5000, and PS6000)
■ IPC COM Port (page 9)

*5 Except GP-4203T

*6 All GP4000 models except GP-4100 series, GP-4*01TM, GP-Rear Module, GP-4201T and GP-4*03T

*7 Except SP-5B00

*8 Except ST-6200

*9 Due to the COM port specifications, flow control is not possible. Omit wiring the control pins on the Display side of the cable diagram.

*10 When using a Terminal Block Conversion Adapter (CA3-ADPTRM-01) instead of the RS-422 Terminal Block Conversion Adapter, refer to Cable Diagram 3A.

*11 Only the COM port which can communicate by RS-422/485 (2 wire) can be used.
■ IPC COM Port (page 9)

IMPORTANT

- The RS-422/485 cable length is normally 1000m or less (for LT-4*01TM and LT-Rear Module, 200m or less), which depends on the External Device. Please refer to the manual of the External Device for more details.
- The connection method and termination resistance depends on the External Device.
- The termination resistance on the Display is not isolated.

3A)

- 1:1 Connection

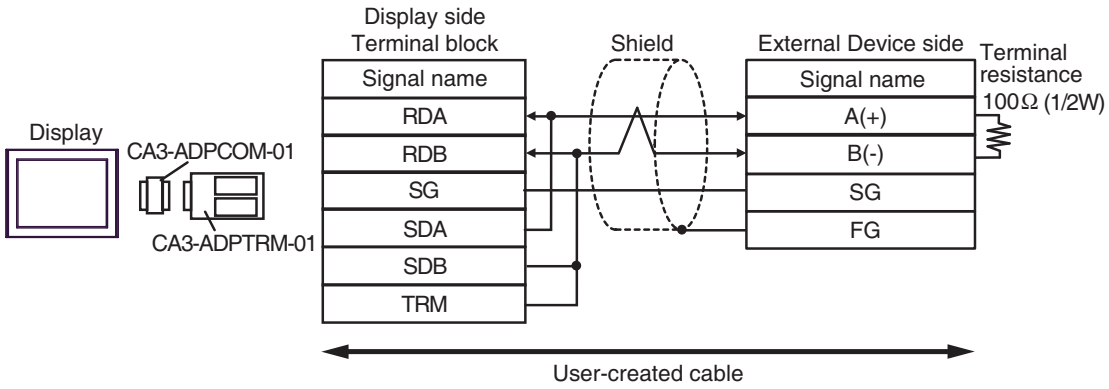

- 1: n Connection

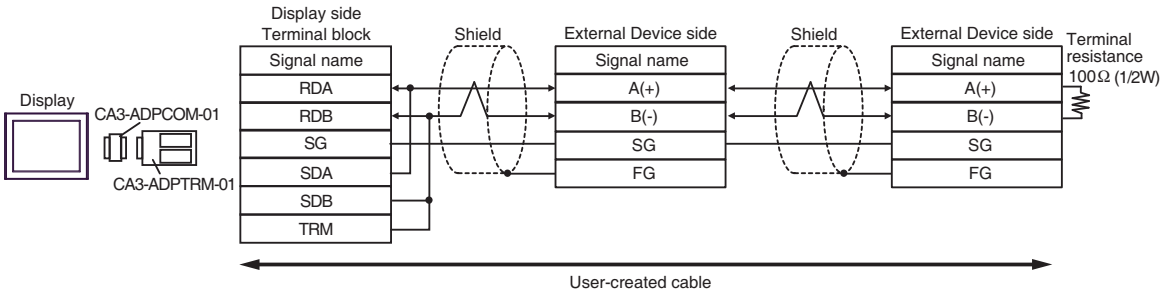

NOTE

- When the RDB terminal of CA3-ADPTRM-01 to the TRM terminal, the termination resistance of 100Ω (1/2W) is inserted between RDA and RDB terminals on the Display.

3B)

- 1:1 Connection

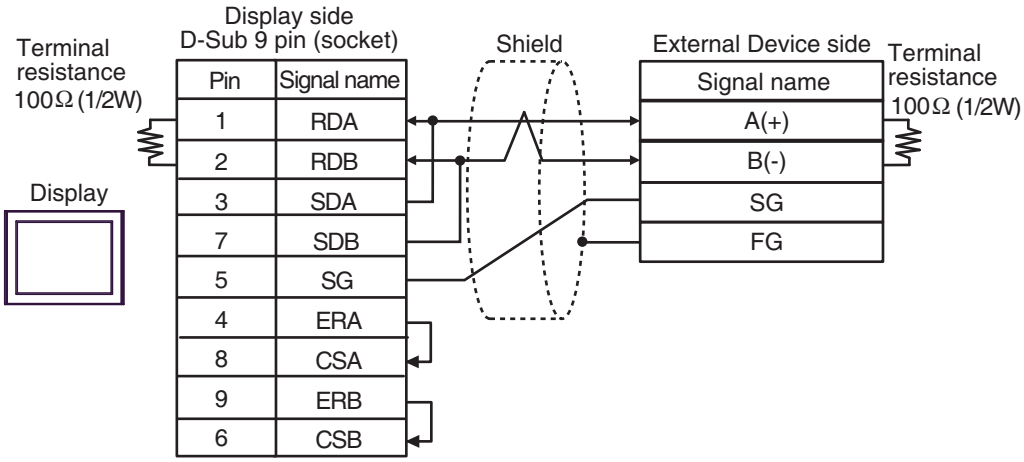

- 1: n Connection

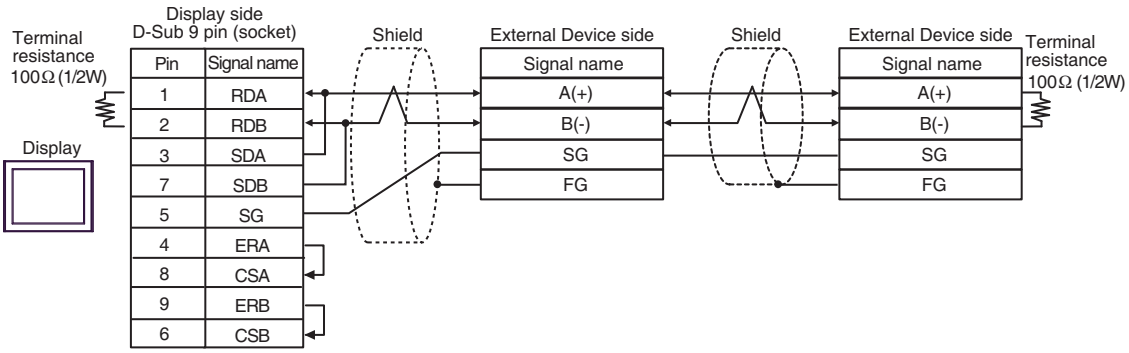

3C)

- 1:1 Connection

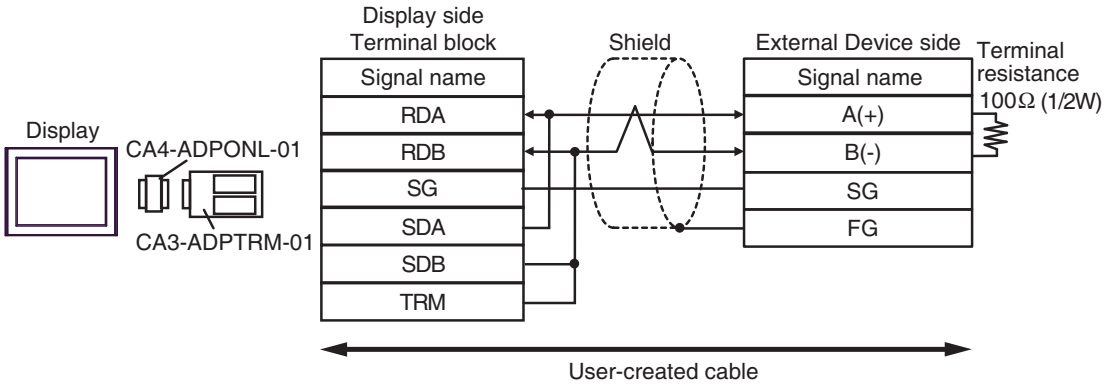

- 1: n Connection

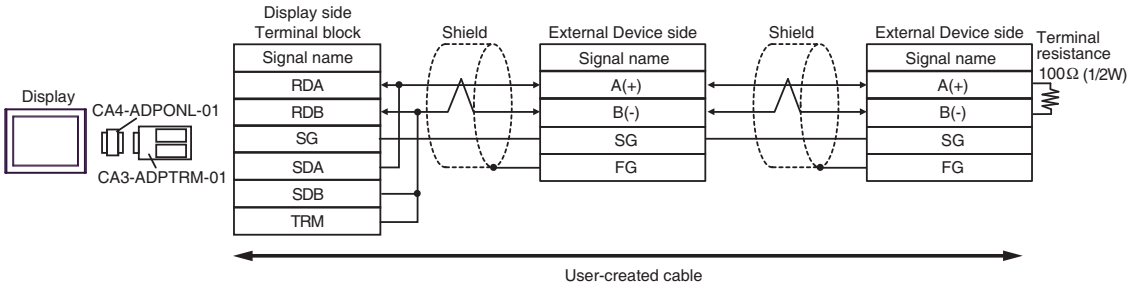

NOTE

- When the RDB terminal of CA3-ADPTRM-01 to the TRM terminal, the termination resistance of 100Ω (1/2W) is inserted between RDA and RDB terminals on the Display.

3D)

- 1:1 Connection

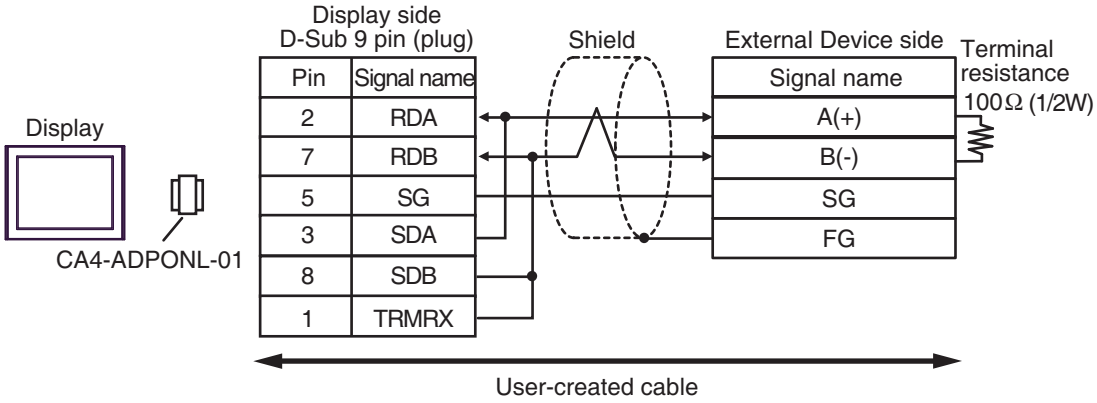

- 1: n Connection

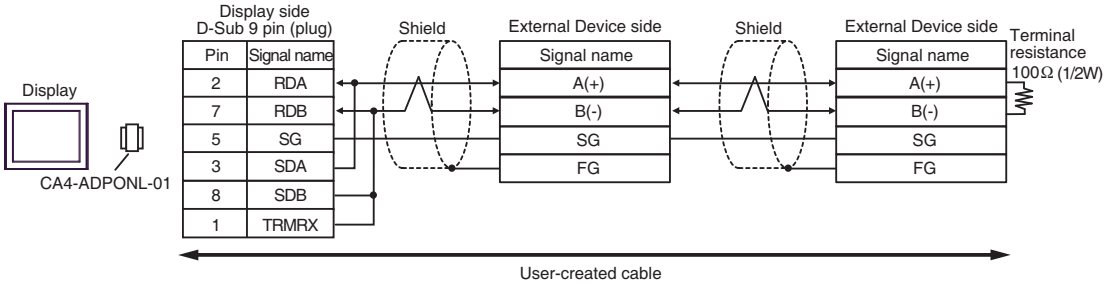

NOTE

- When the RDB terminal of CA4-ADPONL-01 to the TRMRX terminal, the termination resistance of 100Ω (1/2W) is inserted between RDA and RDB terminals on the Display.

3E)

1:1 Connection

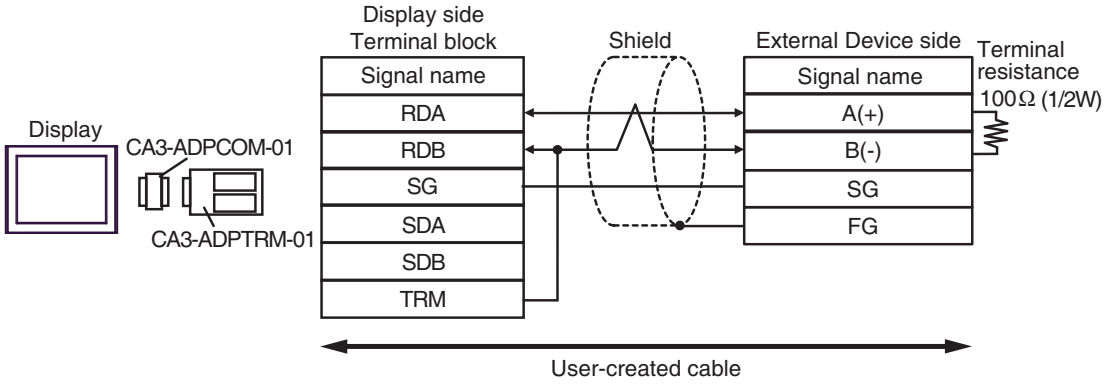

- 1: n Connection

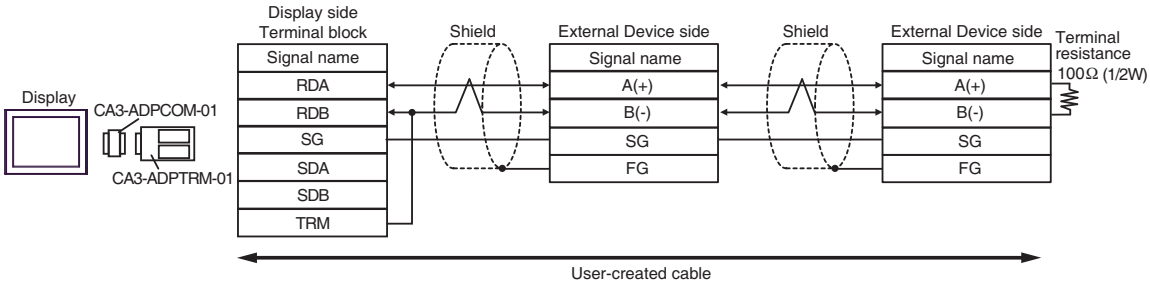

NOTE

- When the RDB terminal of CA3-ADPTRM-01 to the TRM terminal, the termination resistance of 100Ω (1/2W) is inserted between RDA and RDB terminals on the Display.

3F)

- 1:1 Connection

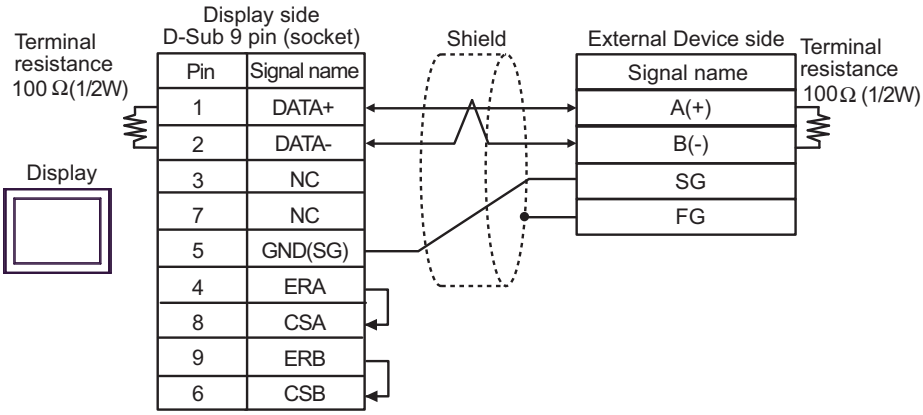

- 1: n Connection

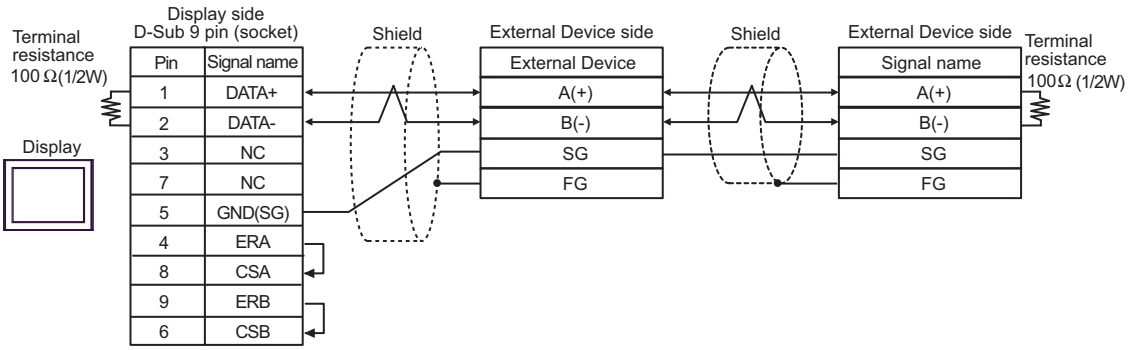

3G)

- 1:1 Connection

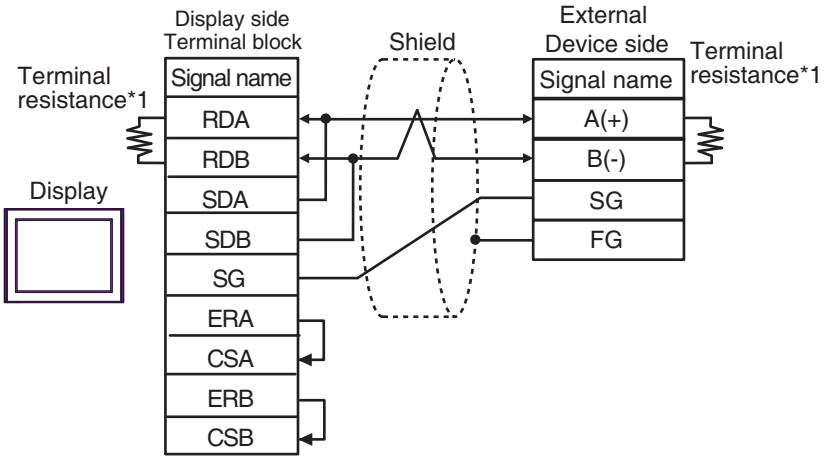

- 1: n Connection

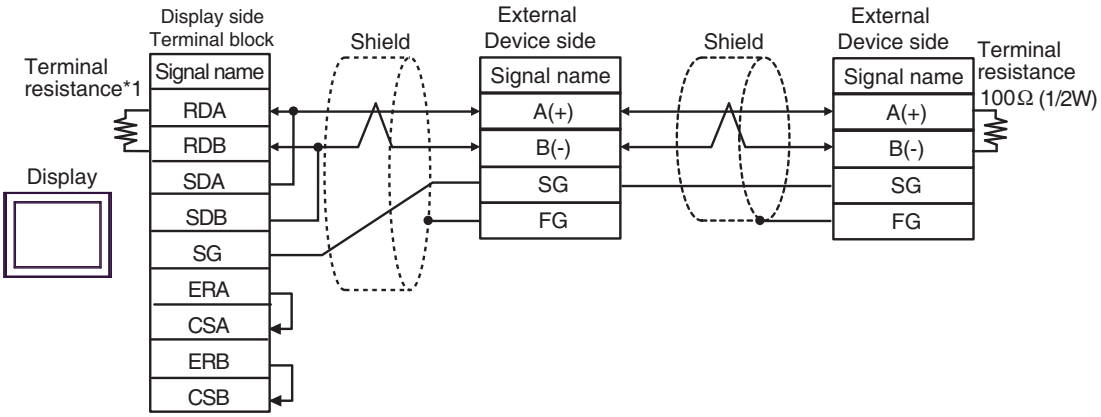

*1 The resistance in the Display is used as the termination resistance. Set the value of the DIP Switch on the rear of the Display as shown in the table below.

DIP Switch No.	Set Value
1	OFF
2	OFF
3	ON
4	ON

3H)

- 1:1 Connection

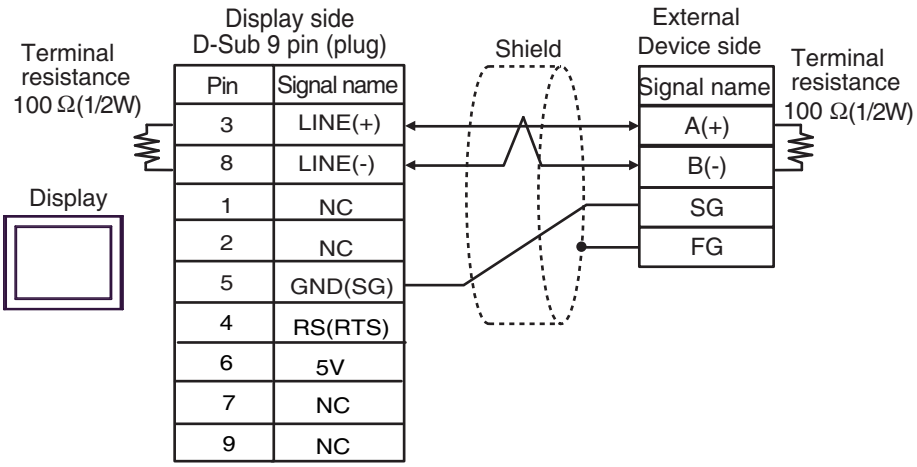

- 1: n Connection

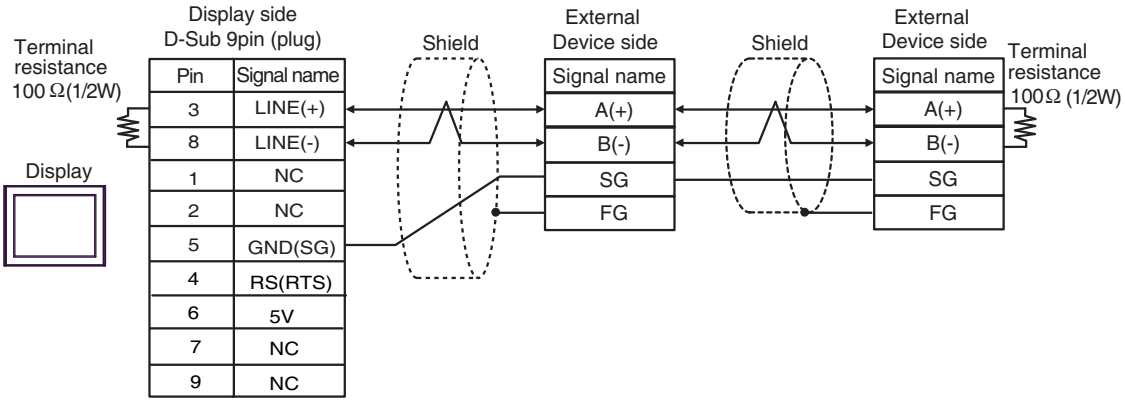

IMPORTANT

- The 5V output (Pin #6) on the Display is the power for the Siemens AG's PROFIBUS connector. Do not use it for other devices.

NOTE

- In COM on the GP-4107, the SG and FG terminals are isolated.

3l)

- 1:1 Connection

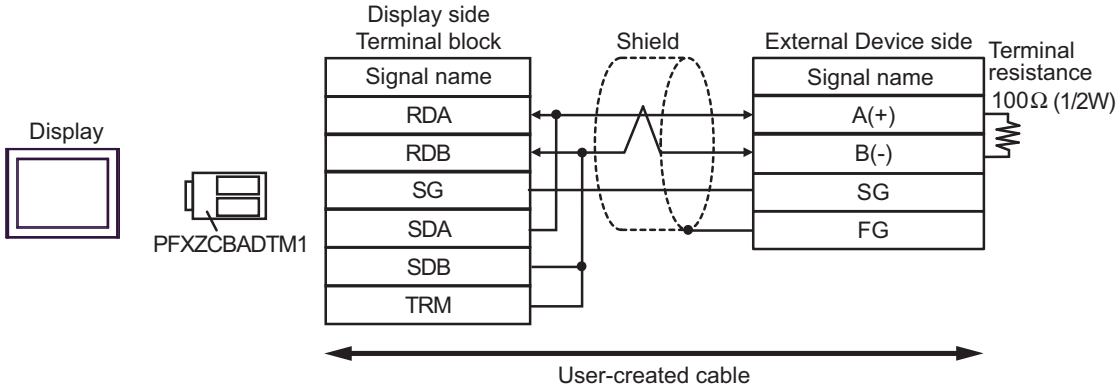

- 1: n Connection

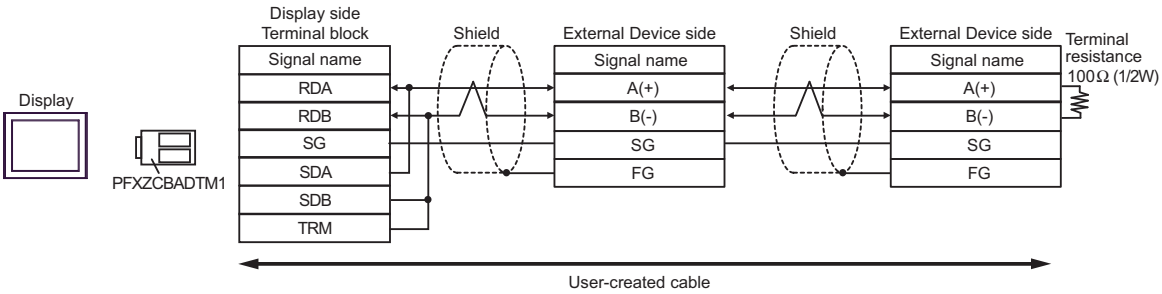

NOTE

- When the RDB terminal of PFXZCBADTM1 to the TRM terminal, the termination resistance of 100Ω (1/2W) is inserted between RDA and RDB terminals on the Display.

3J)

- 1:1 Connection

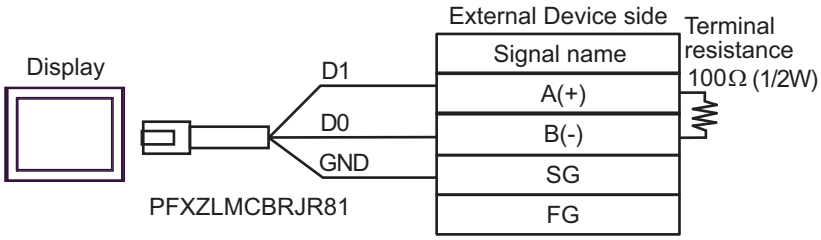

- 1: n Connection

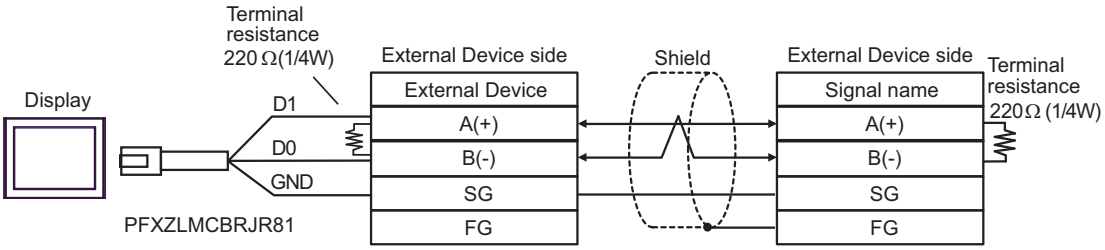

3K)

- 1:1 Connection

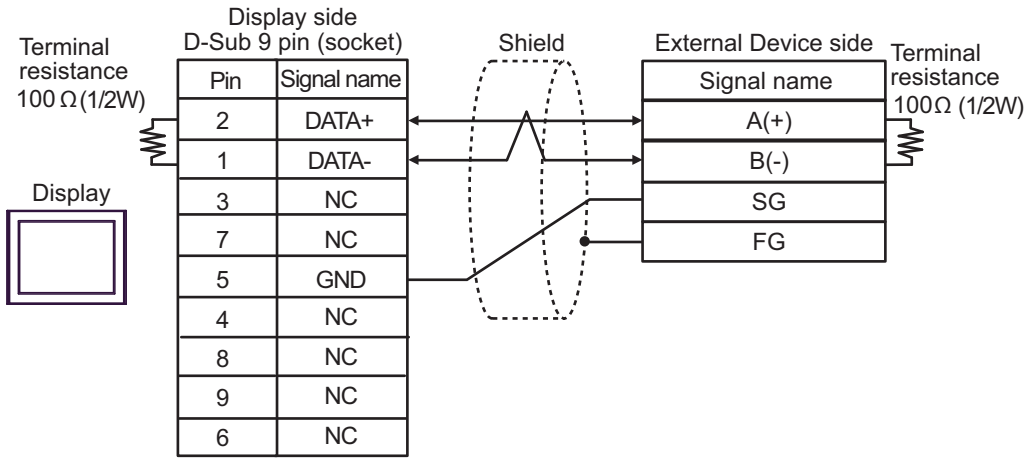

- 1: n Connection

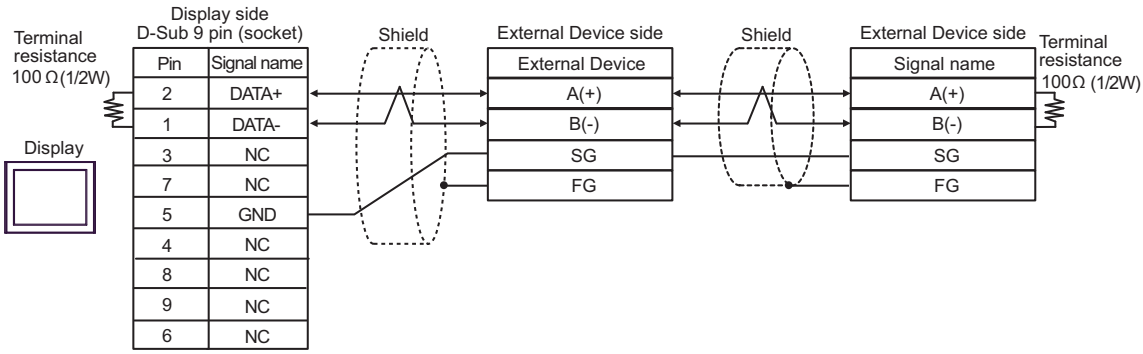

6.4 Cable Diagram 4

Display (Connection Port)	Cable		Remarks
GP3000*1 (COM1) AGP-3302B (COM2) GP-4*01TM (COM1) GP-Rear Module (COM1) ST3000*2 (COM2) LT3000 (COM1)	4A	COM Port Conversion Adapter by Pro-face CA3-ADPCOM-01 + Terminal Block Conversion Adapter by Pro-face CA3-ADPTRM-01 + User created cable	The cable length must be 500m maximum.
	4B	User created cable	
GP3000*3 (COM2)	4C	Online adapter by Pro-face CA4-ADPONL-01 + Connector terminal block conversion adapter by Pro-face CA3-ADPTRM-01 + User created cable	The cable length must be 500m maximum.
	4D	Online adapter by Pro-face CA4-ADPONL-01 + User created cable	
IPC*4	4E	COM Port Conversion Adapter by Pro-face CA3-ADPCOM-01 + Terminal Block Conversion Adapter by Pro-face CA3-ADPTRM-01 + User created cable	The cable length must be 500m maximum.
	4F	User created cable	
GP-4106 (COM1) GP-4116T (COM1)	4G	User created cable	The cable length must be 500m maximum.
GP-4107 (COM1) GP-4*03T*5 (COM2) GP-4203T (COM1)	4H	User created cable	The cable length must be 500m maximum.
GP4000*6 (COM2) GP-4201T (COM1) GP6000 (COM2) SP5000*7 (COM1/2) SP-5B00 (COM2) ST6000*8 (COM2) ST-6200 (COM1) STM6000 (COM1) STC6000 (COM1) ET6000*9 (COM2) PS6000 (Basic Box) (COM1/2)	4I	RS-422 terminal block conversion adapter by Pro-face PFXZCBADTM1*10 + User created cable	The cable length must be 500m maximum.
	4B	User created cable	

Display (Connection Port)	Cable		Remarks
LT-4*01TM (COM1) LT-Rear Module (COM1)	4J	RJ45 RS-485 Cable (5m) by Pro-face PFXZLMCBRJR81	The cable length must be 200m maximum.
PE-4000B*11 PS5000*11 PS6000 (Optional Interface)*11	4K	User created cable	The cable length must be 500m maximum.

*1 All GP3000 models except AGP-3302B

*2 Except AST-3211A and AST-3302B

*3 All GP3000 models except GP-3200 series and AGP-3302B

*4 Only the COM port which can communicate by RS-422/485 (2 wire) can be used. (Except PE-4000B, PS5000, and PS6000)
■ IPC COM Port (page 9)

*5 Except GP-4203T

*6 All GP4000 models except GP-4100 series, GP-4*01TM, GP-Rear Module, GP-4201T and GP-4*03T

*7 Except SP-5B00

*8 Except ST-6200

*9 Due to the COM port specifications, flow control is not possible. Omit wiring the control pins on the Display side of the cable diagram.

*10 When using a Terminal Block Conversion Adapter (CA3-ADPTRM-01) instead of the RS-422 Terminal Block Conversion Adapter, refer to Cable Diagram 4A.

*11 Only the COM port which can communicate by RS-422/485 (2 wire) can be used.
■ IPC COM Port (page 9)

4A)

- 1:1 Connection

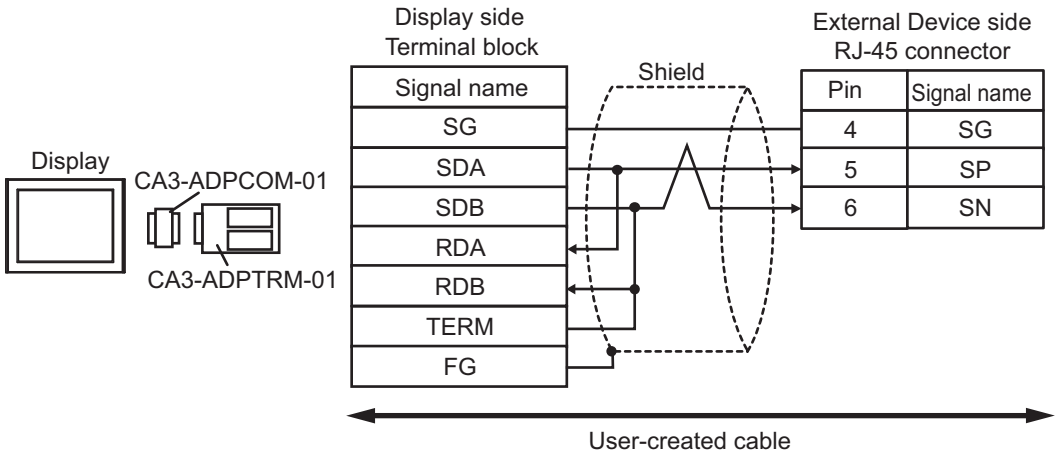

- 1: n Connection

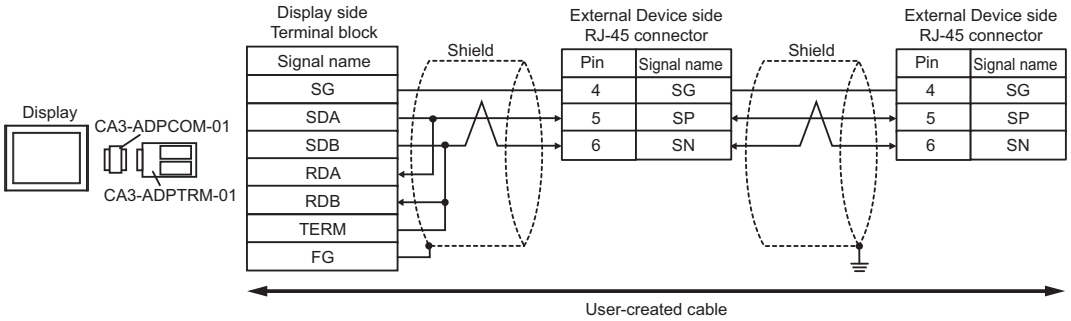

NOTE

- Turn ON the termination resistor switch on the External Device located at the end to enable the termination resistor (120Ω).

4B)

- 1:1 Connection

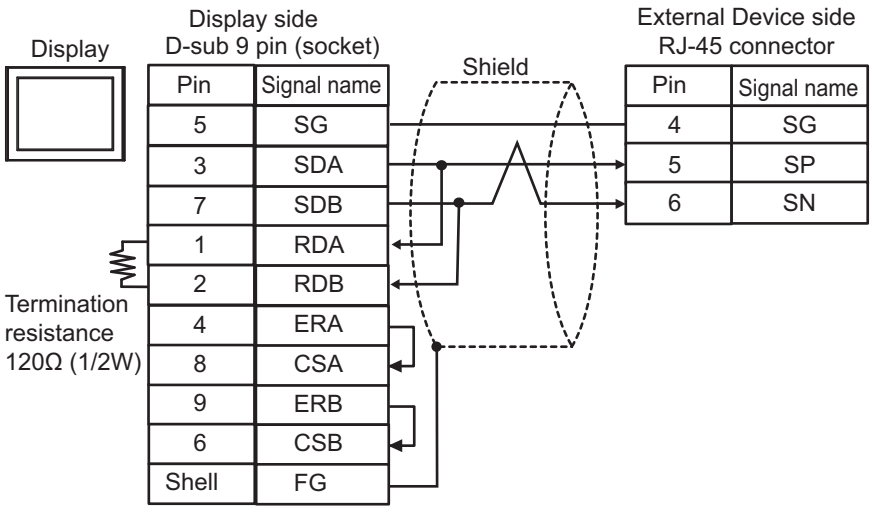

- 1: n Connection

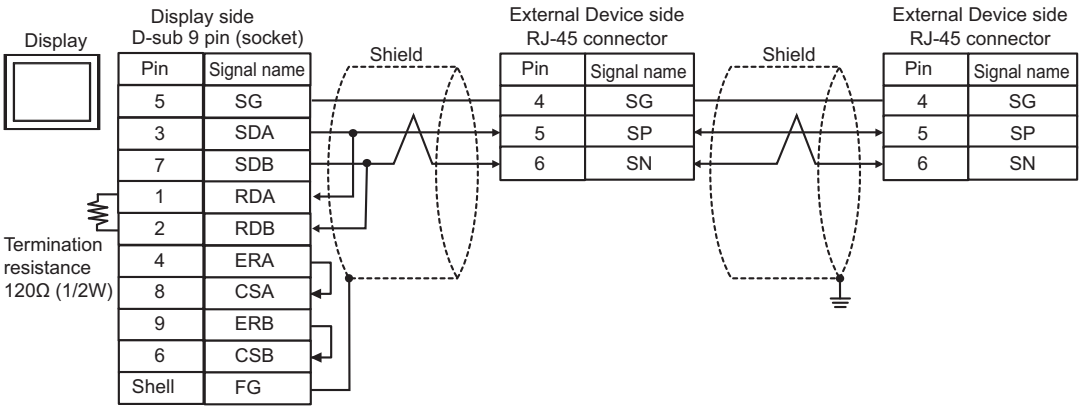

NOTE

- Turn ON the termination resistor switch on the External Device located at the end to enable the termination resistor (120Ω).

4C)

- 1:1 Connection

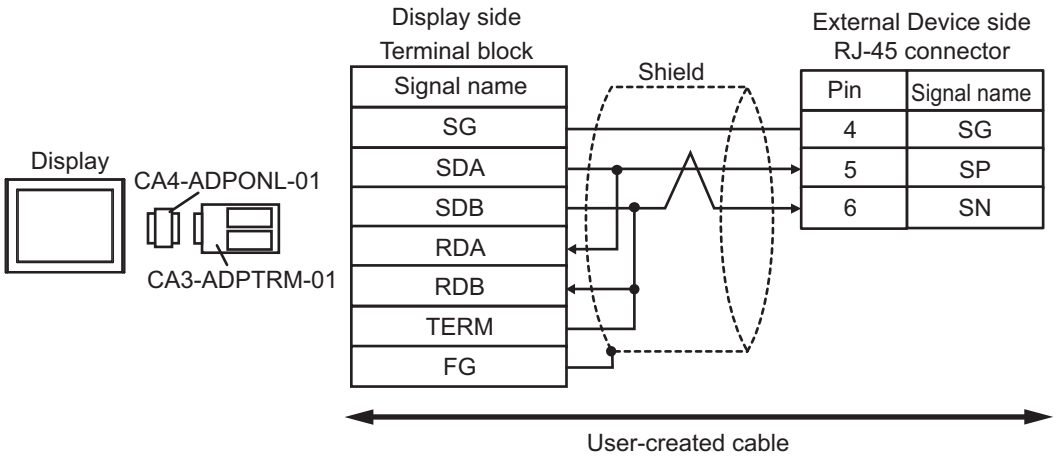

- 1: n Connection

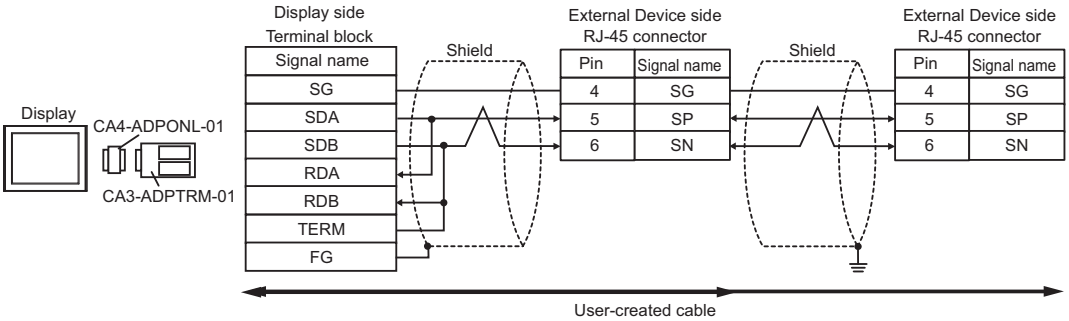

NOTE

- Turn ON the termination resistor switch on the External Device located at the end to enable the termination resistor (120Ω).

4D)

- 1:1 Connection

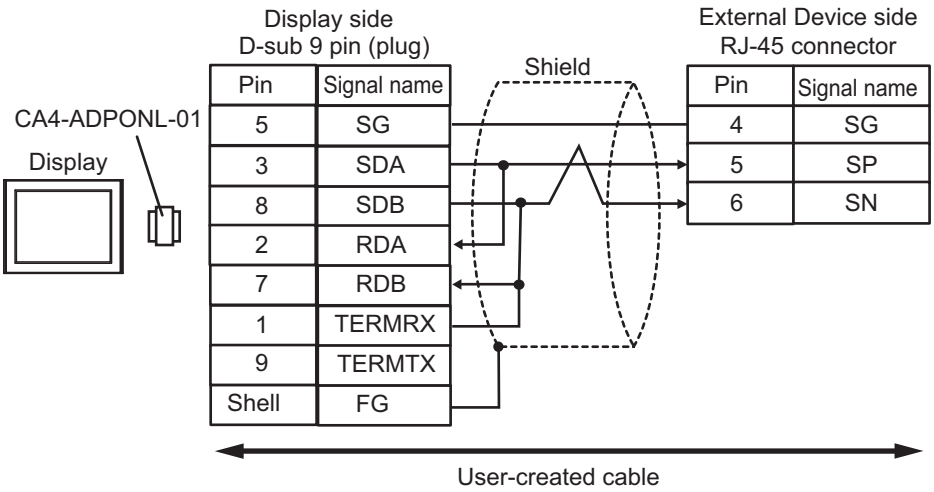

- 1: n Connection

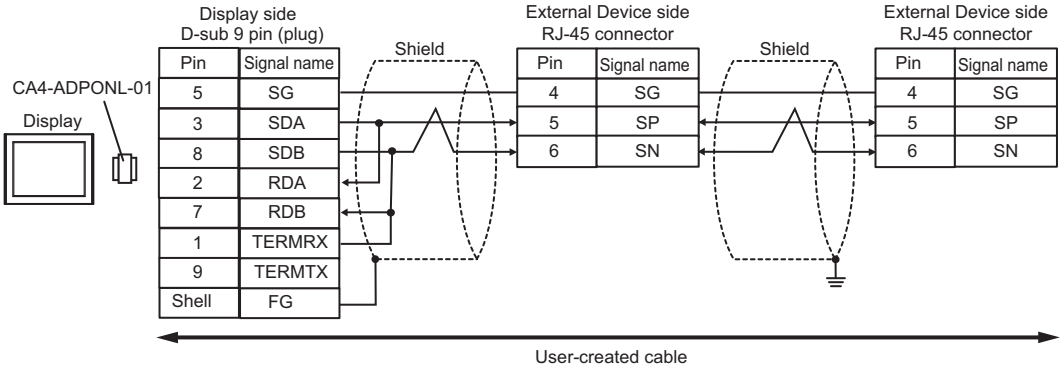

NOTE

- Turn ON the termination resistor switch on the External Device located at the end to enable the termination resistor (120Ω).

4E)

1:1 Connection

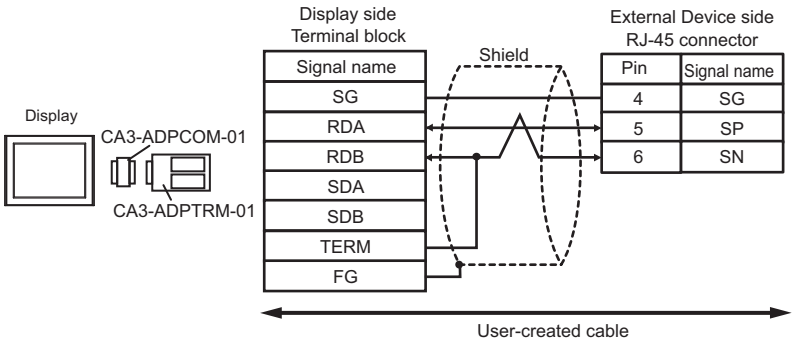

- 1: n Connection

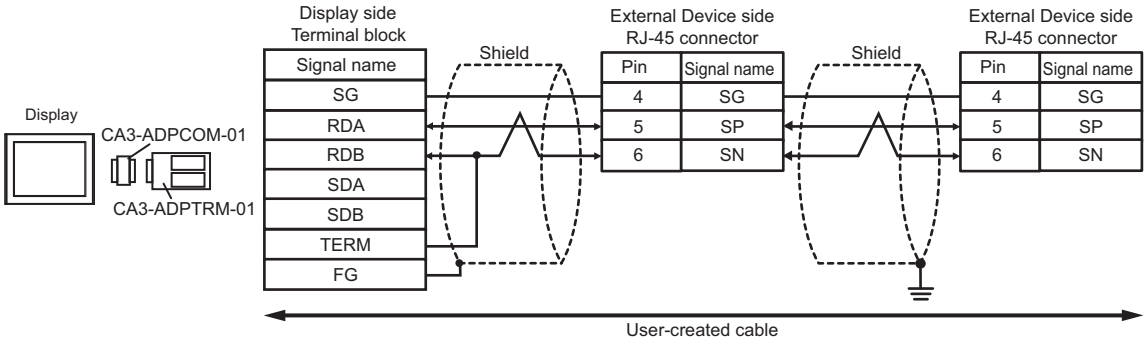

NOTE

- Turn ON the termination resistor switch on the External Device located at the end to enable the termination resistor (120Ω).

4F)

- 1:1 Connection

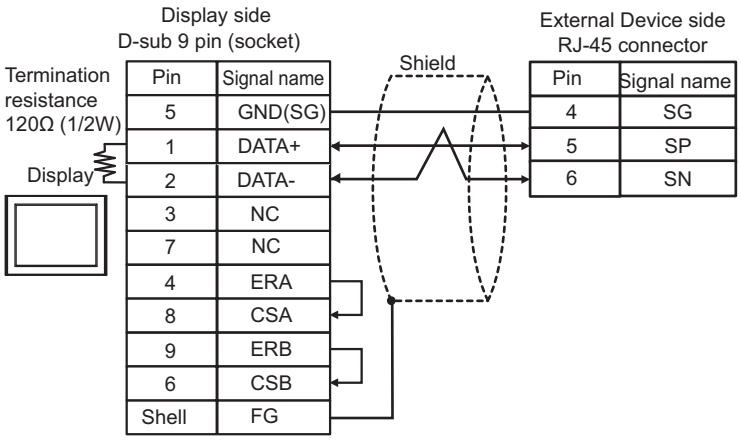

- 1: n Connection

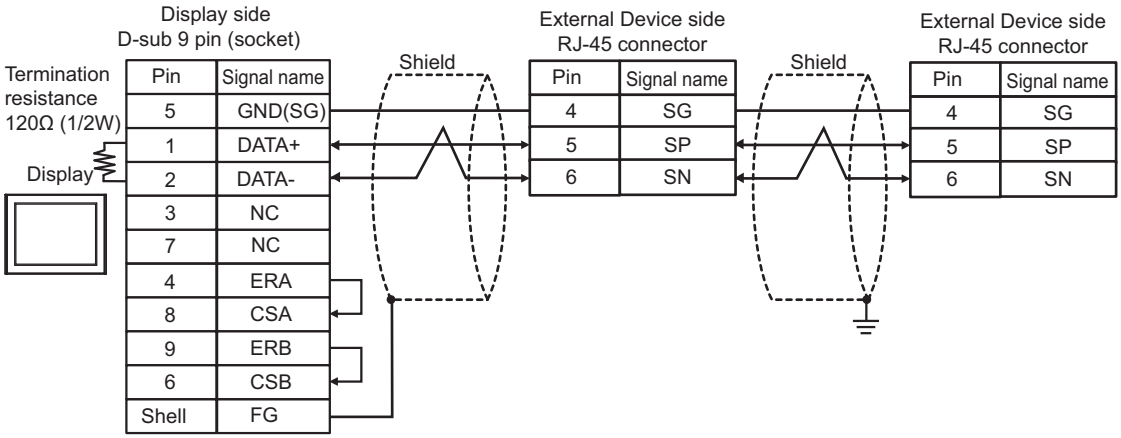

NOTE

- Turn ON the termination resistor switch on the External Device located at the end to enable the termination resistor (120Ω).

4G)

- 1:1 Connection

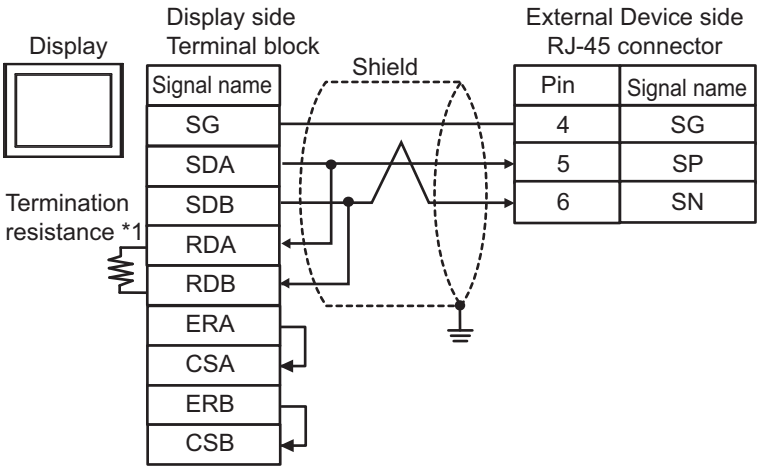

- 1: n Connection

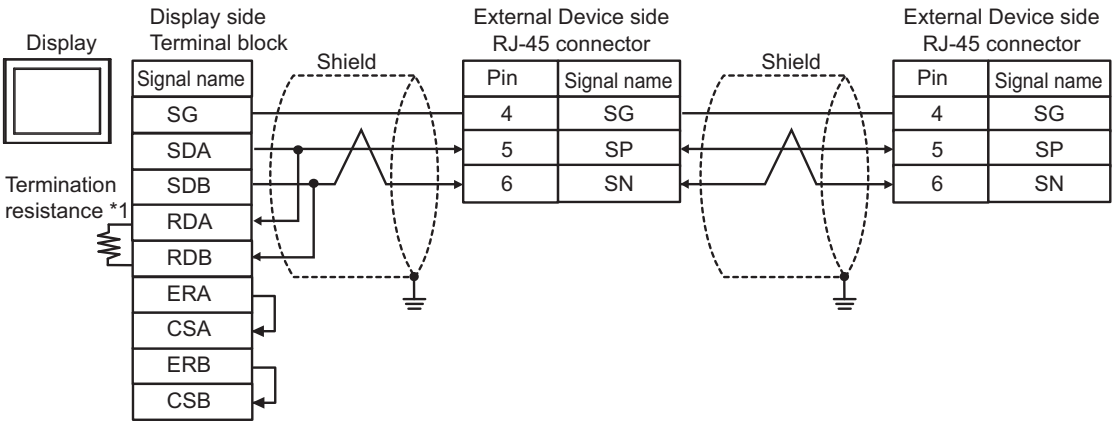

NOTE

- Turn ON the termination resistor switch on the External Device located at the end to enable the termination resistor (120Ω).

*1 The resistance in the Display is used as the termination resistance. Set the value of the DIP Switch on the rear of the Display as shown in the table below.

DIP Switch No.	Set Value
1	OFF
2	OFF
3	ON
4	ON

4H)

- 1:1 Connection

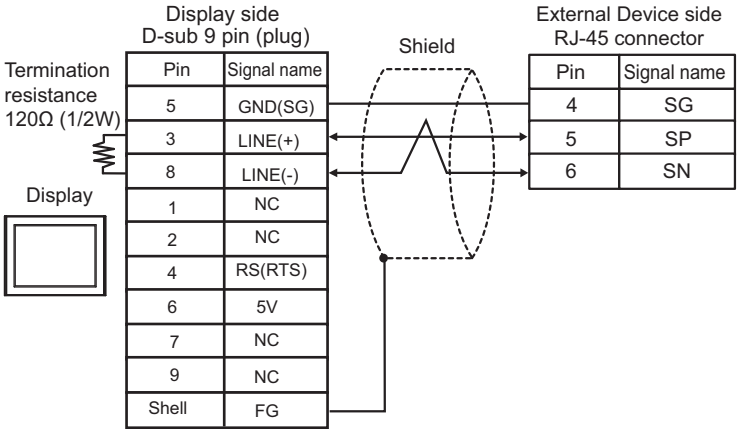

- 1: n Connection

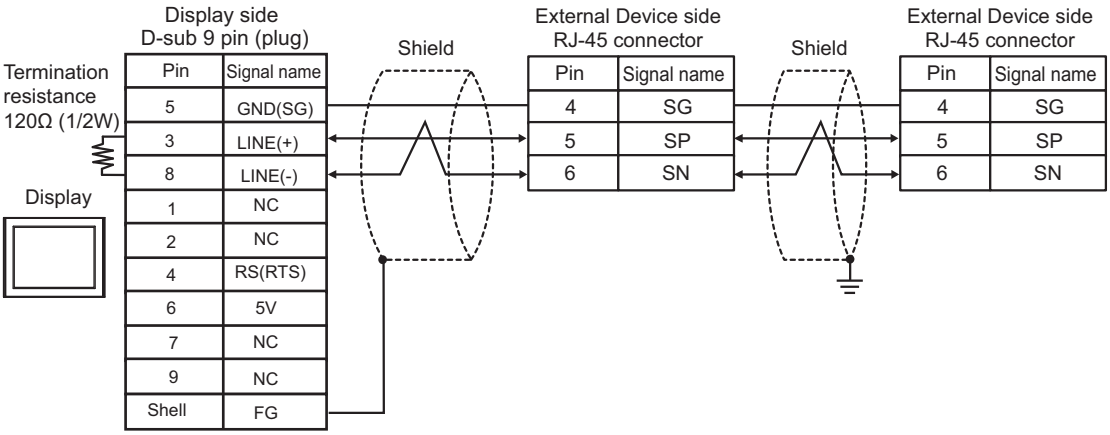

IMPORTANT

- The 5V output (Pin #6) on the Display is the power for the Siemens AG's PROFIBUS connector. Do not use it for other devices.

NOTE

- Turn ON the termination resistor switch on the External Device located at the end to enable the termination resistor (120Ω).
- In COM on the GP-4107, the SG and FG terminals are isolated.

4l)

- 1:1 Connection

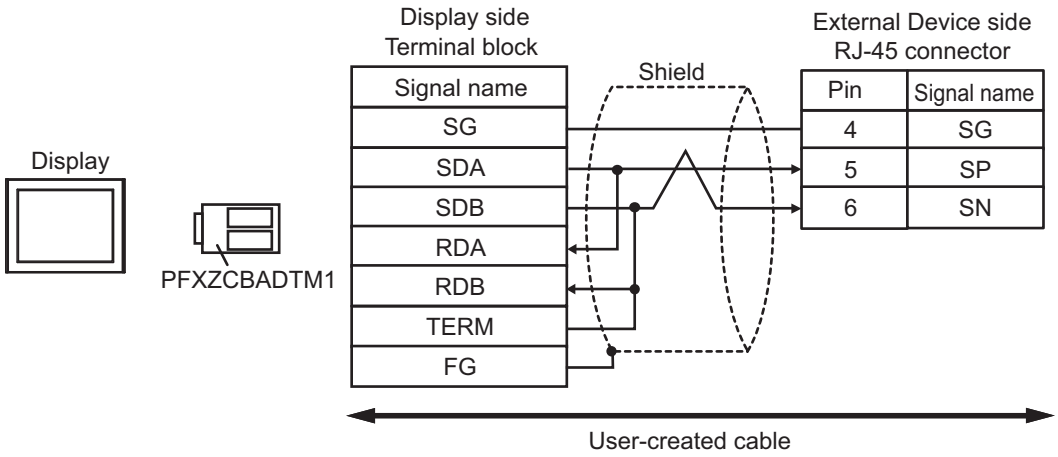

- 1: n Connection

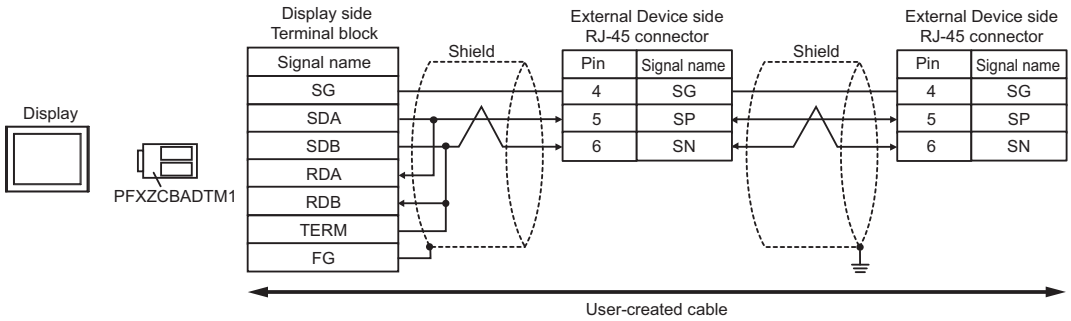

NOTE

- Turn ON the termination resistor switch on the External Device located at the end to enable the termination resistor (120Ω).

4J)

- 1:1 Connection

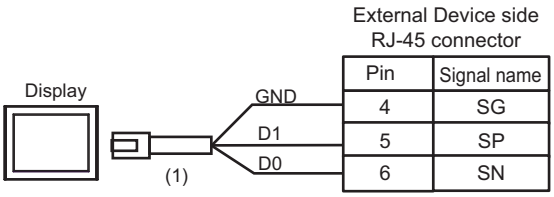

NOTE

- Turn ON the termination resistor switch on the External Device located at the end to enable the termination resistor (120Ω).

- 1: n Connection

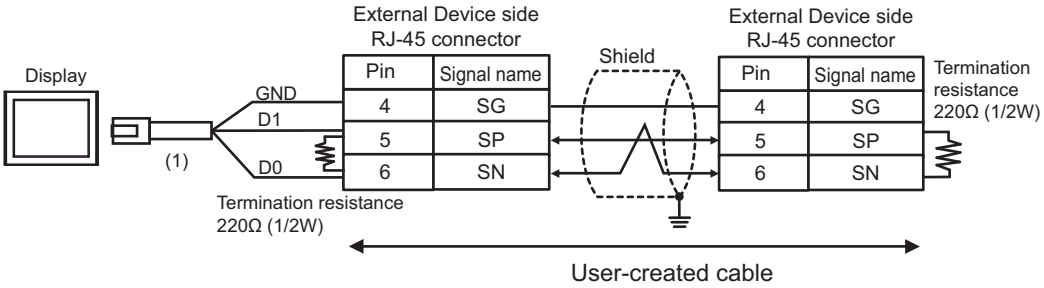

Legend	Name	Notes
(1)	RJ45 RS-485 Cable (5m) by Pro-face PFXZLMCBRJR81	

4K)

- 1:1 Connection

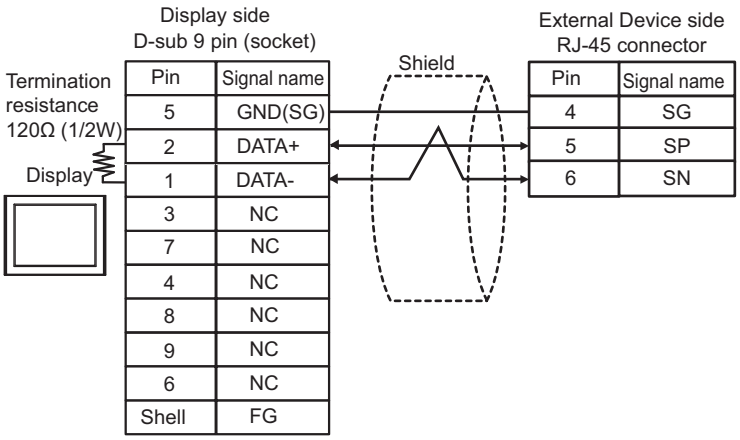

- 1: n Connection

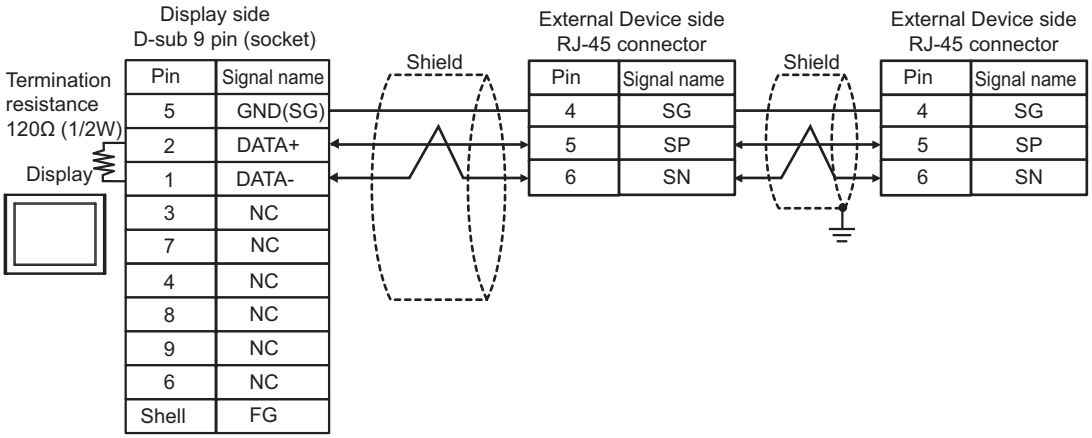

NOTE

- Turn ON the termination resistor switch on the External Device located at the end to enable the termination resistor (120Ω).

6.5 Cable Diagram 5

Display (Connection Port)	Cable		Remarks
GP3000 (COM1) GP4000*1 (COM1) GP6000 (COM1) SP5000*2 (COM1/2) SP-5B00 (COM1) ST3000 (COM1) ST6000 (COM1) STM6000 (COM1) STC6000 (COM1) ET6000 (COM1) LT3000 (COM1) IPC*3 PC/AT	5A	User created cable	The cable length must be 15m maximum.
GP-4105 (COM1) GP-4115T (COM1) GP-4115T3 (COM1)	5B	User created cable	The cable length must be 15m maximum.
LT-4*01TM (COM1) LT-Rear Module (COM1)	5C	RJ45 RS-232C Cable (5m) by Pro-face PFXZLMCBRJR21	The cable length must be 5m maximum.

*1 All GP4000 models except GP-4100 series and GP-4203T

*2 Except SP-5B00

*3 Only the COM port which can communicate by RS-232C can be used.
■ IPC COM Port (page 9)

5A)

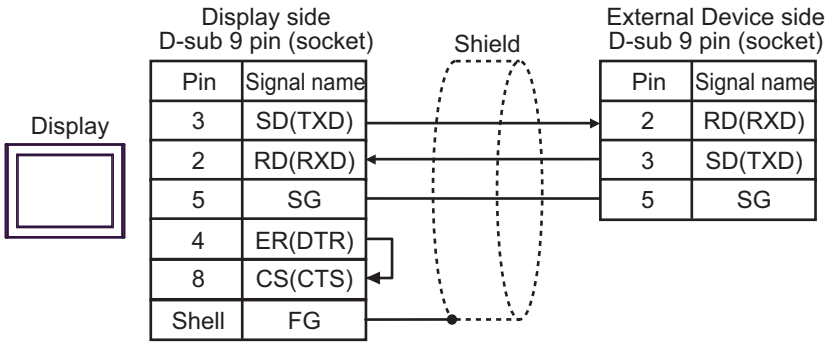

5B)

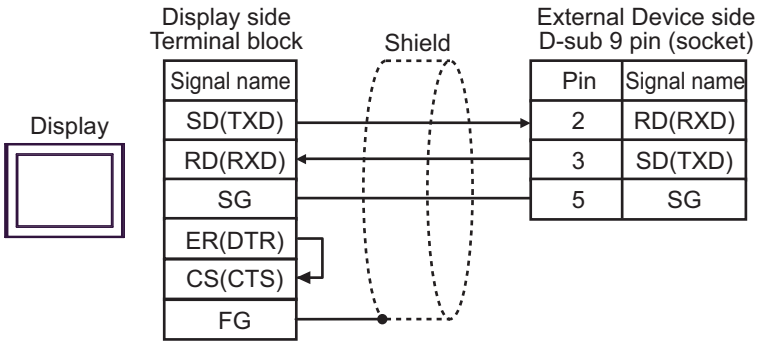

5C)

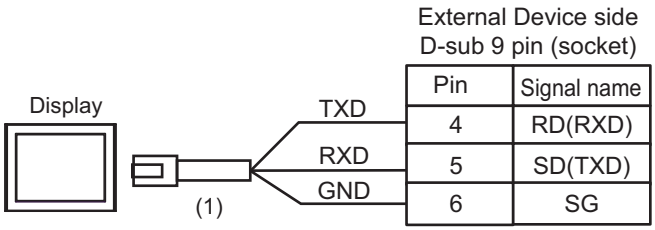

Legend	Name	Notes
(1)	RJ45 RS-232C Cable (5m) by Pro-face PFXZLMCBRJR21	

6.6 Cable Diagram 6

Display (Connection Port)	Cable		Remarks
GP3000*1 (COM1) AGP-3302B (COM2) GP-4*01TM (COM1) GP-Rear Module (COM1) ST3000*2 (COM2) LT3000 (COM1) IPC*3	6A	COM port conversion adapter by Pro-face CA3-ADPCOM-01 + Connector terminal block conversion adapter by Pro-face CA3-ADPTRM-01 + User created cable	The cable length must be 500m maximum.
	6B	User created cable	
GP3000*4 (COM2)	6C	Online adapter by Pro-face CA4-ADPONL-01 + Connector terminal block conversion adapter by Pro-face CA3-ADPTRM-01 + User created cable	The cable length must be 500m maximum.
	6D	Online adapter by Pro-face CA4-ADPONL-01 + User created cable	
GP-4106 (COM1) GP-4116T (COM1)	6E	User created cable	The cable length must be 500m maximum.
GP4000*5 (COM2) GP-4201T (COM1) GP6000 (COM2) SP5000*6 (COM1/2) SP-5B00 (COM2) ST6000*7 (COM2) ST-6200 (COM1) STM6000 (COM1) STC6000 (COM1) ET6000*8 (COM2) PS6000 (Basic Box) (COM1/2)	6F	RS-422 terminal block conversion adapter by Pro-face PFXZCBADTM1*9 + User created cable	The cable length must be 500m maximum.
	6B	User created cable	
PE-4000B*10 PS5000*10 PS6000 (Optional Interface)*10	6G	User created cable	The cable length must be 500m maximum.

*1 All GP3000 models except AGP-3302B

*2 Except AST-3211A and AST-3302B

*3 Only the COM port which can communicate by RS-422/485 (4 wire) can be used. (Except PE-4000B, PS5000, and PS6000)

■ IPC COM Port (page 9)

*4 All GP3000 models except GP-3200 series and AGP-3302B

*5 All GP4000 models except GP-4100 series, GP-4*01TM, GP-Rear Module, GP-4201T and GP-4*03T

*6 Except SP-5B00

*7 Except ST-6200

*8 Due to the COM port specifications, flow control is not possible. Omit wiring the control pins on the Display side of the cable diagram.

*9 When using a Terminal Block Conversion Adapter (CA3-ADPTRM-01) instead of the RS-422 Terminal Block Conversion Adapter, refer to Cable Diagram 6A.

*10 Only the COM port which can communicate by RS-422/485 (4 wire) can be used.
■ IPC COM Port (page 9)

6A)

- 1:1 Connection

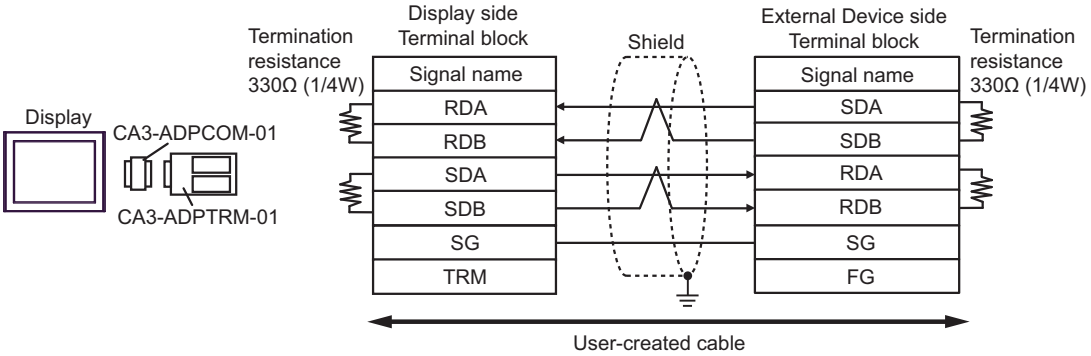

- 1:n Connection

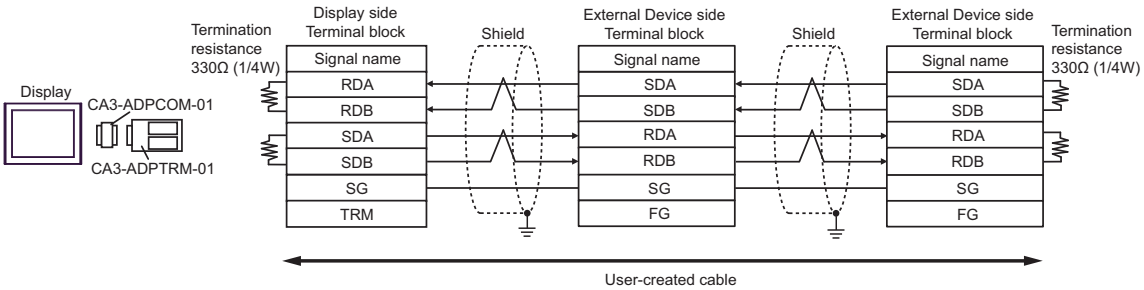

6B)

- 1:1 Connection

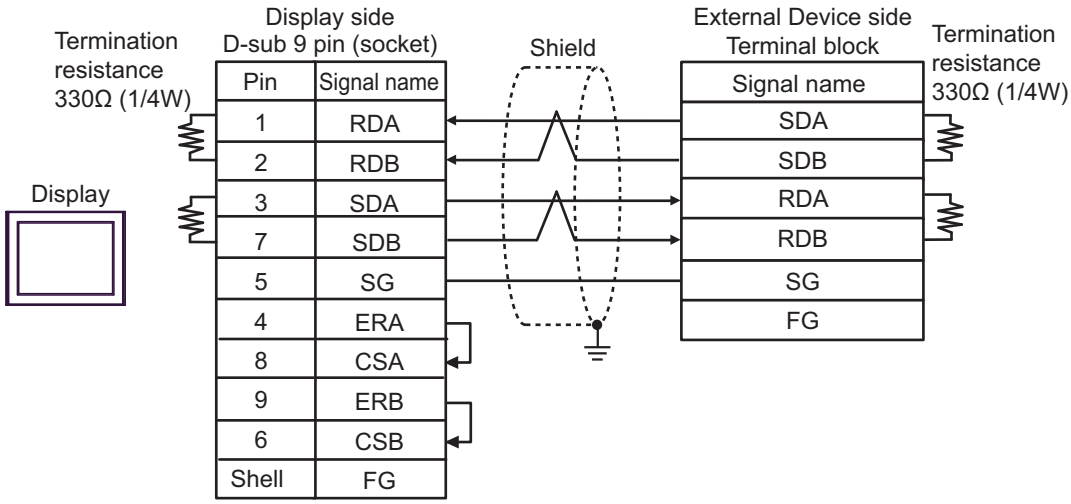

- 1:n Connection

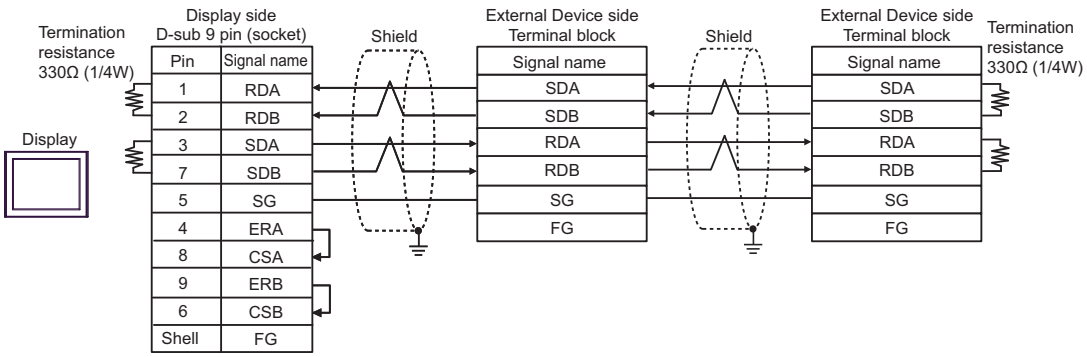

6C)

- 1:1 Connection

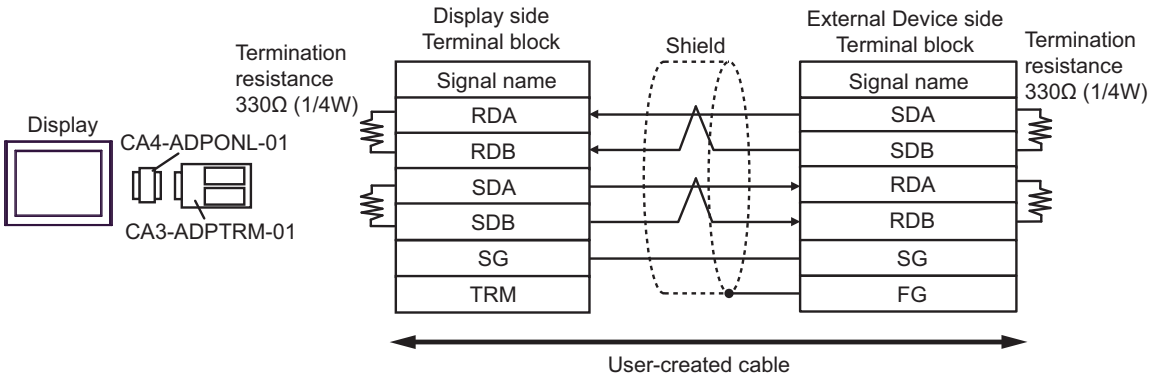

- 1:n Connection

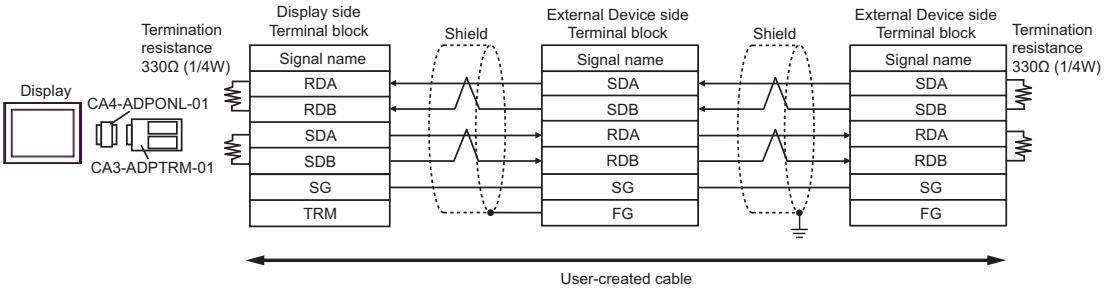

6D)

- 1:1 Connection

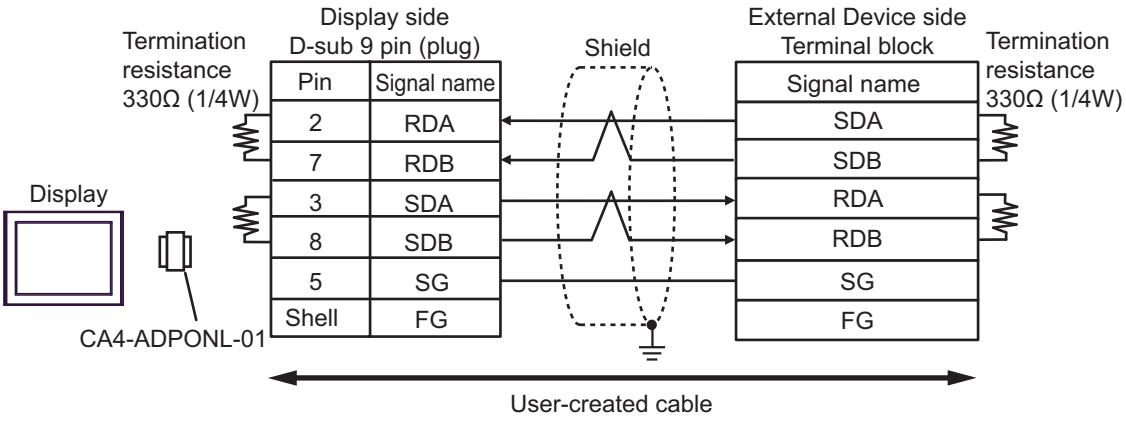

- 1:n Connection

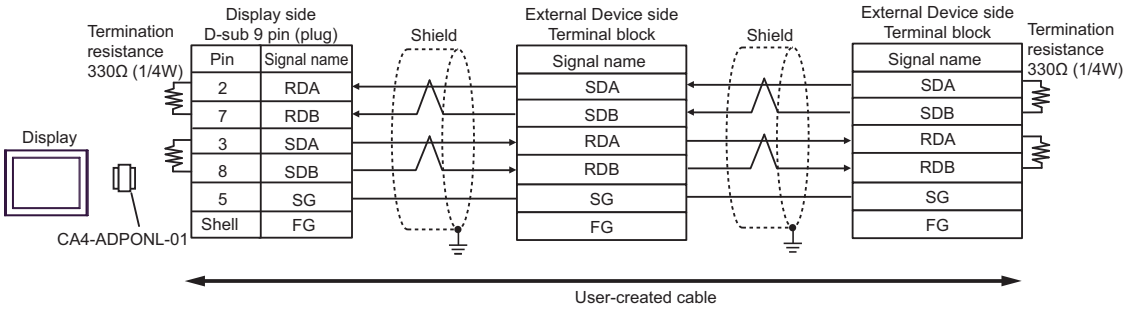

6E)

- 1:1 Connection

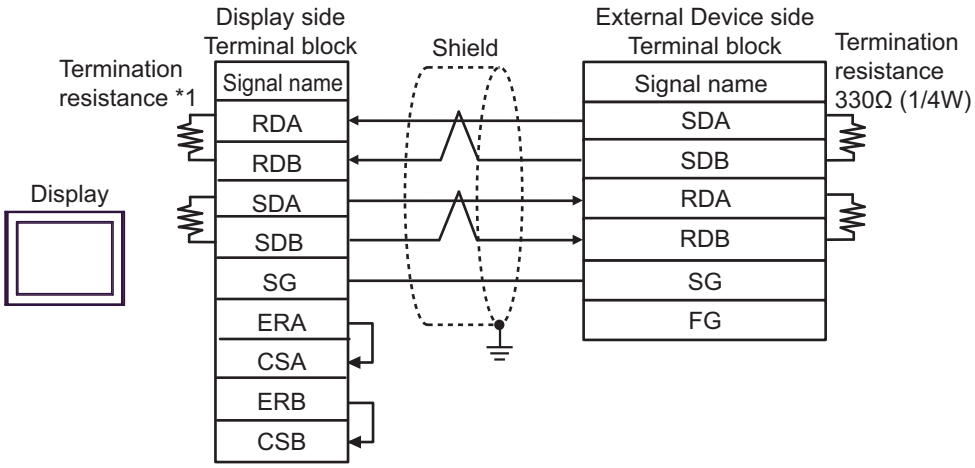

- 1:n Connection

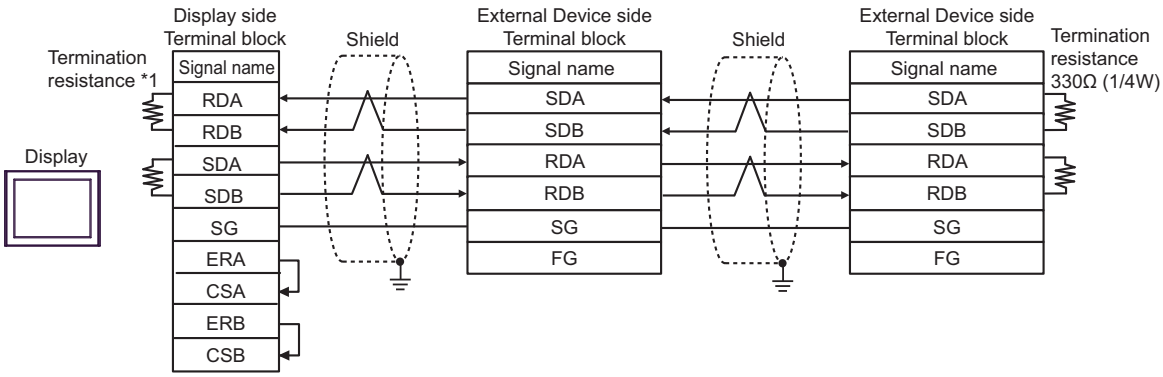

*1 The resistance in the Display is used as the termination resistance. Set the value of the DIP Switch on the rear of the Display as shown in the table below.

DIP Switch No.	Set Value
1	OFF
2	OFF
3	ON
4	ON

6F)

- 1:1 Connection

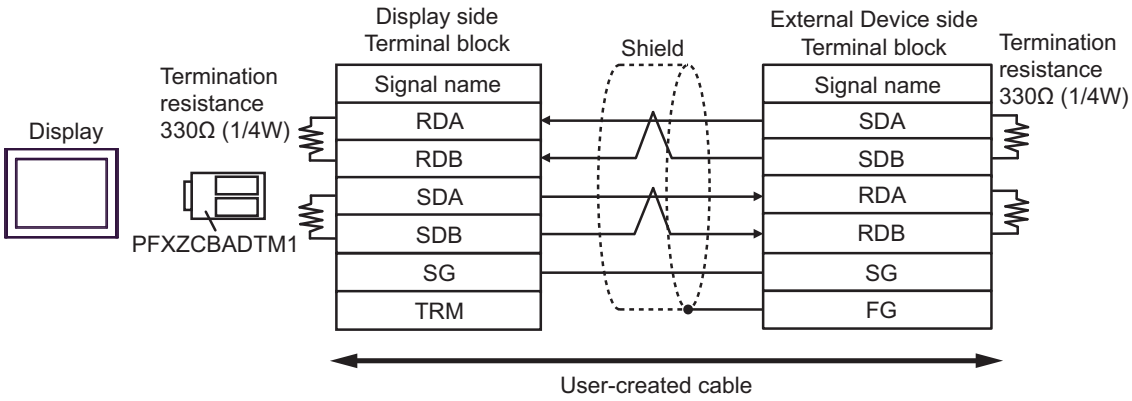

- 1:n Connection

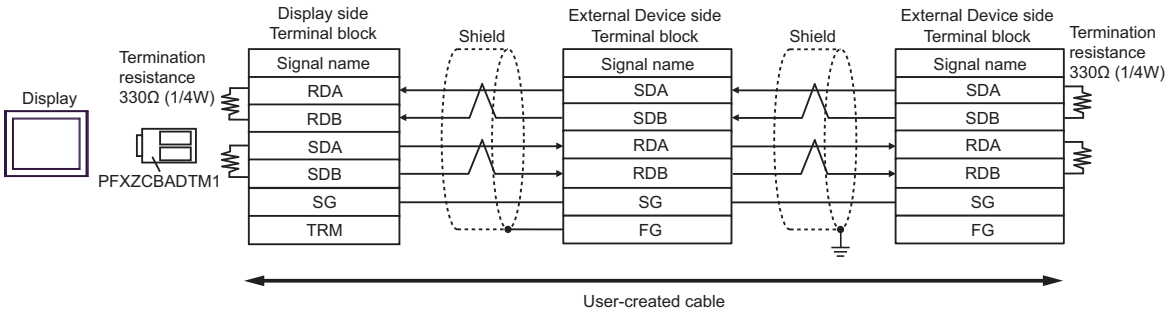

6G)

- 1:1 Connection

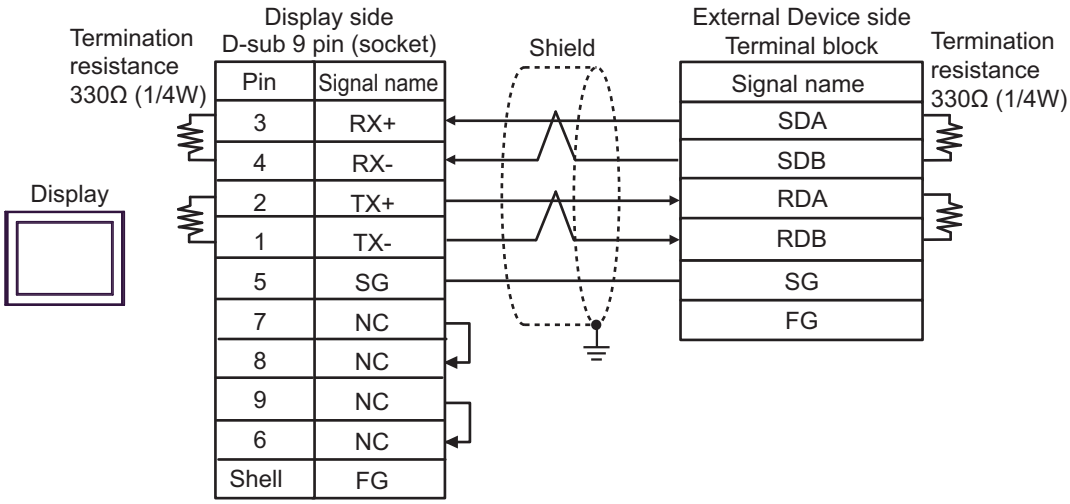

- 1:n Connection

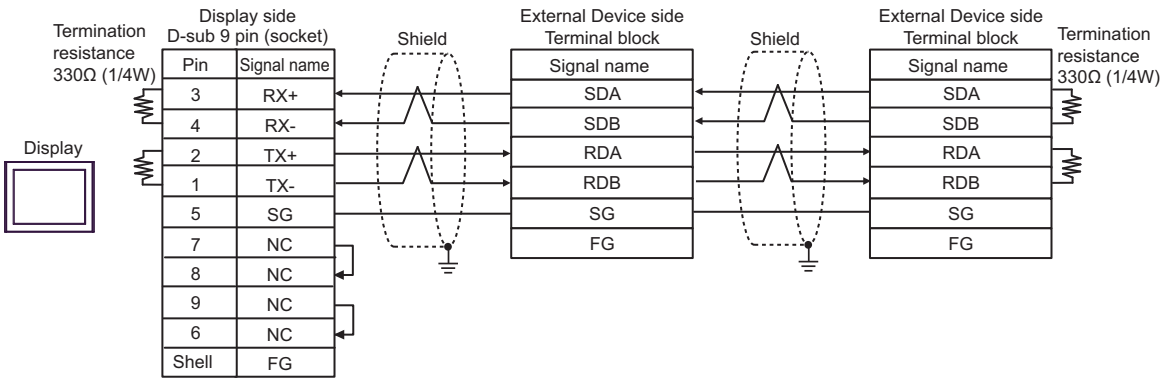

6.7 Cable Diagram 7

Display (Connection Port)	Cable		Remarks
GP3000*1 (COM1) AGP-3302B (COM2) GP-4*01TM (COM1) GP-Rear Module (COM1) ST3000*2 (COM2) LT3000 (COM1)	7A	COM Port Conversion Adapter by Pro-face CA3-ADPCOM-01 + Terminal Block Conversion Adapter by Pro-face CA3-ADPTRM-01 + User created cable	The cable length must be 500m maximum.
	7B	User created cable	
GP3000*3 (COM2)	7C	Online adapter by Pro-face CA4-ADPONL-01 + Connector terminal block conversion adapter by Pro-face CA3-ADPTRM-01 + User created cable	The cable length must be 500m maximum.
	7D	Online adapter by Pro-face CA4-ADPONL-01 + User created cable	
IPC*4	7E	COM Port Conversion Adapter by Pro-face CA3-ADPCOM-01 + Terminal Block Conversion Adapter by Pro-face CA3-ADPTRM-01 + User created cable	The cable length must be 500m maximum.
	7F	User created cable	
GP-4106 (COM1) GP-4116T (COM1)	7G	User created cable	The cable length must be 500m maximum.
GP-4107 (COM1) GP-4*03T*5 (COM2) GP-4203T (COM1)	7H	User created cable	The cable length must be 500m maximum.
GP4000*6 (COM2) GP-4201T (COM1) GP6000 (COM2) SP5000*7 (COM1/2) SP-5B00 (COM2) ST6000*8 (COM2) ST-6200 (COM1) STM6000 (COM1) STC6000 (COM1) ET6000*9 (COM2) PS6000 (Basic Box) (COM1/2)	7I	RS-422 terminal block conversion adapter by Pro-face PFXZCBADTM1*10 + User created cable	The cable length must be 500m maximum.
	7B	User created cable	

Display (Connection Port)	Cable		Remarks
LT-4*01TM (COM1) LT-Rear Module (COM1)	7J	RJ45 RS-485 Cable (5m) by Pro-face PFXZLMCBRJR81	The cable length must be 200m maximum.
PE-4000B*11 PS5000*11 PS6000 (Optional Interface)*11	7K	User created cable	The cable length must be 500m maximum.

*1 All GP3000 models except AGP-3302B

*2 Except AST-3211A and AST-3302B

*3 All GP3000 models except GP-3200 series and AGP-3302B

*4 Only the COM port which can communicate by RS-422/485 (2 wire) can be used. (Except PE-4000B, PS5000, and PS6000)
■ IPC COM Port (page 9)

*5 Except GP-4203T

*6 All GP4000 models except GP-4100 series, GP-4*01TM, GP-Rear Module, GP-4201T and GP-4*03T

*7 Except SP-5B00

*8 Except ST-6200

*9 Due to the COM port specifications, flow control is not possible. Omit wiring the control pins on the Display side of the cable diagram.

*10 When using a Terminal Block Conversion Adapter (CA3-ADPTRM-01) instead of the RS-422 Terminal Block Conversion Adapter, refer to Cable Diagram 7A.

*11 Only the COM port which can communicate by RS-422/485 (2 wire) can be used.
■ IPC COM Port (page 9)

7A)

- 1:1 Connection

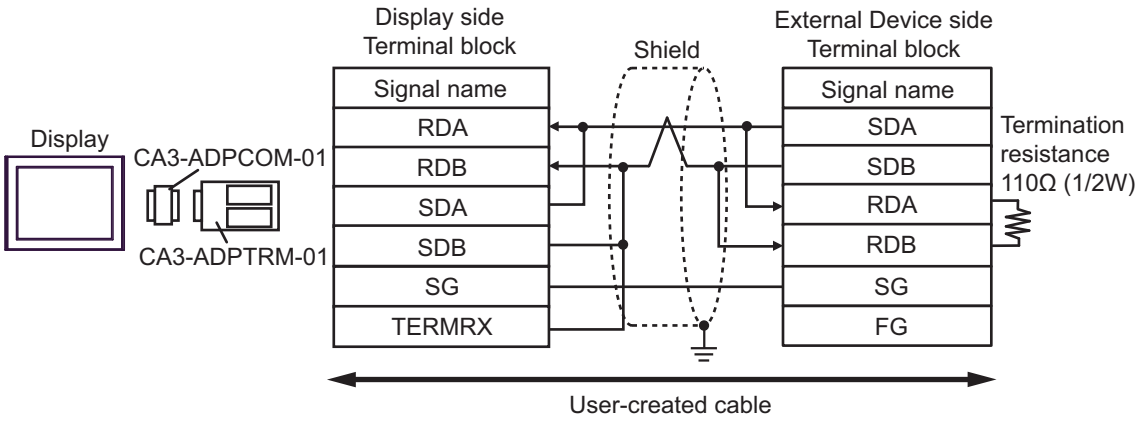

- 1: n Connection

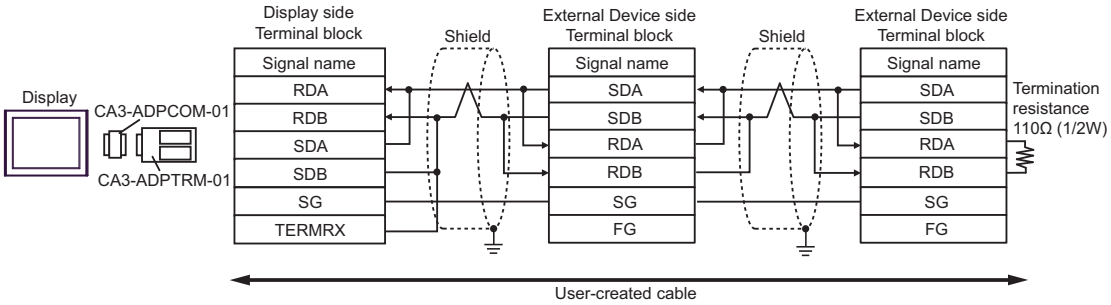

7B)

- 1:1 Connection

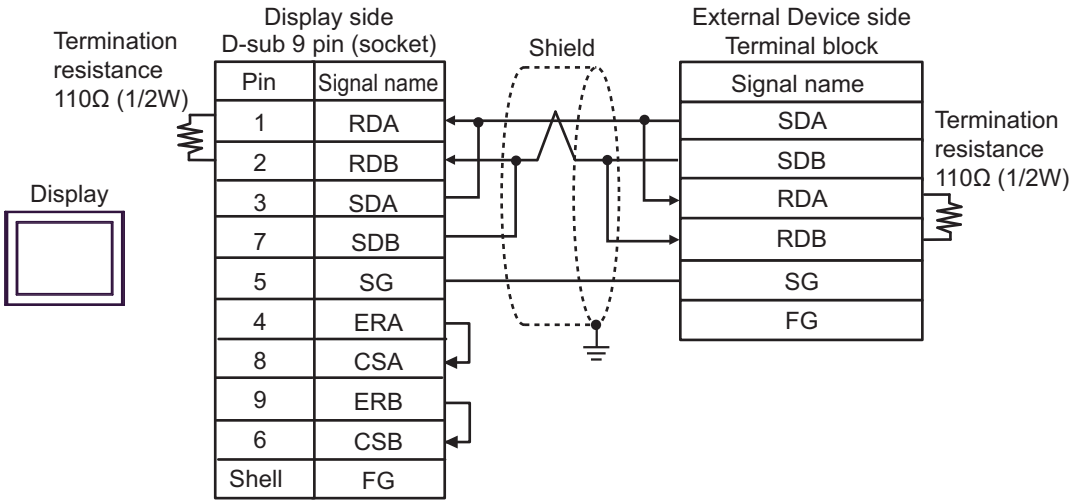

- 1: n Connection

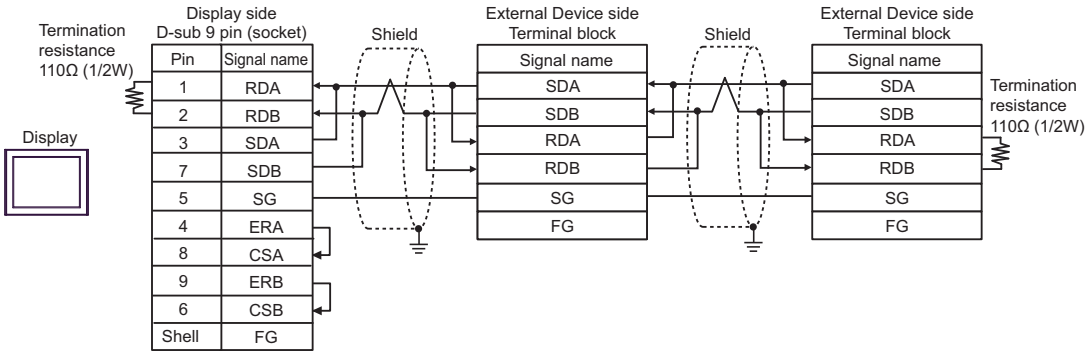

7C)

- 1:1 Connection

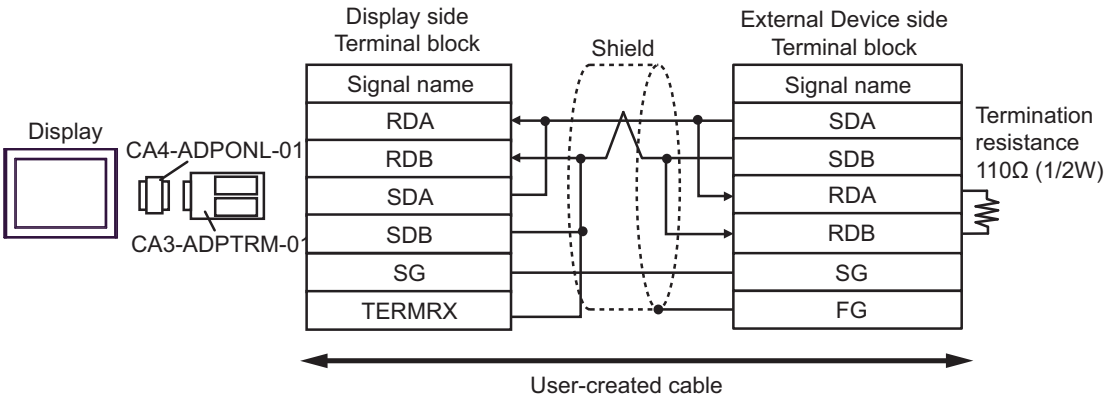

- 1: n Connection

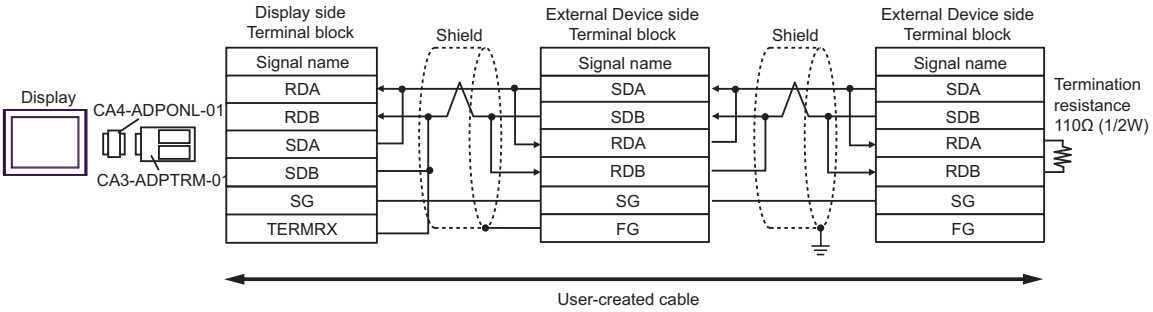

7D)

- 1:1 Connection

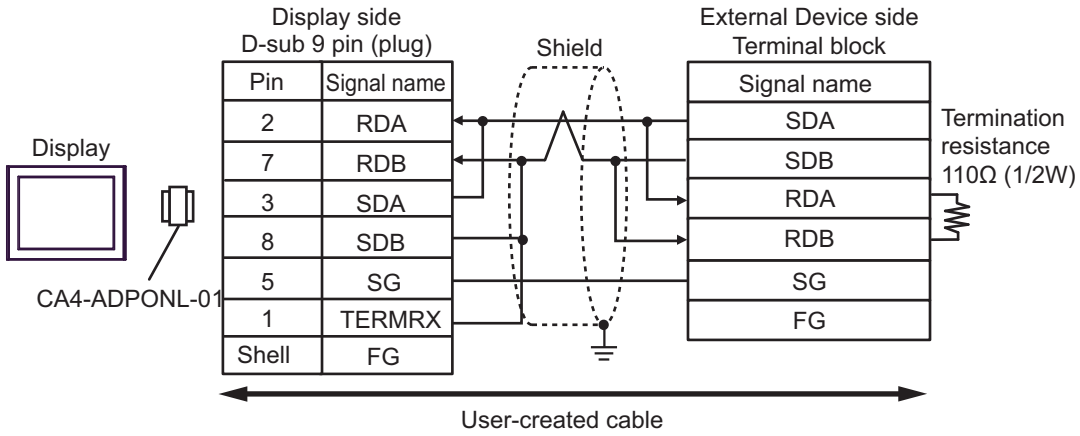

- 1: n Connection

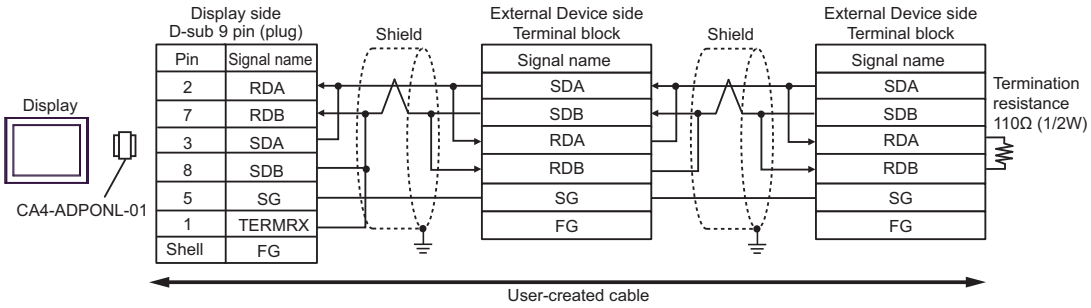

7E)

1:1 Connection

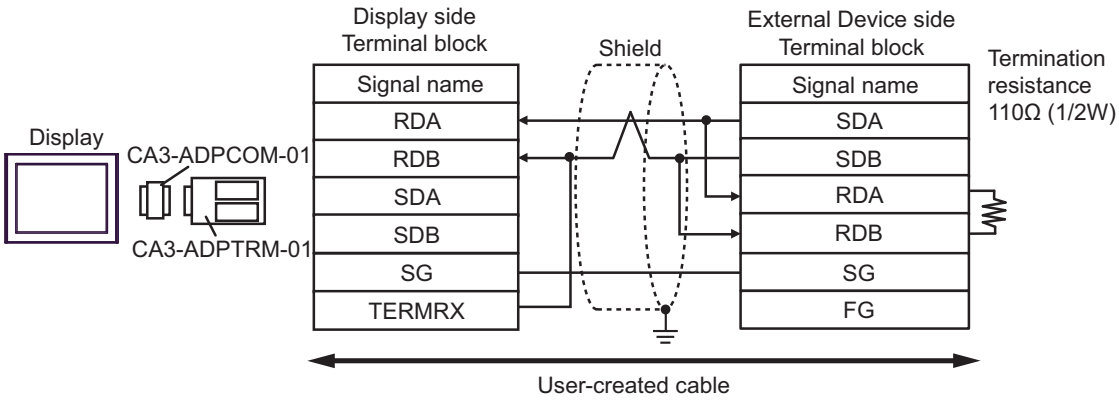

- 1: n Connection

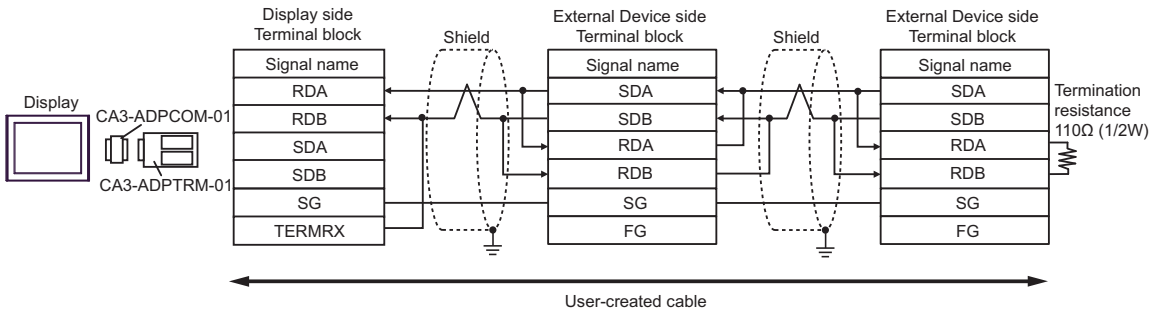

7F)

- 1:1 Connection

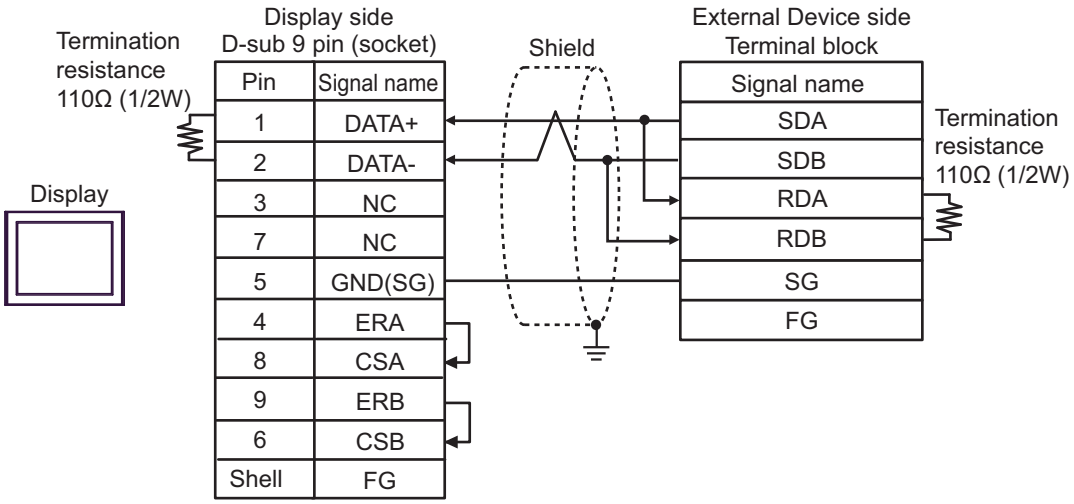

- 1: n Connection

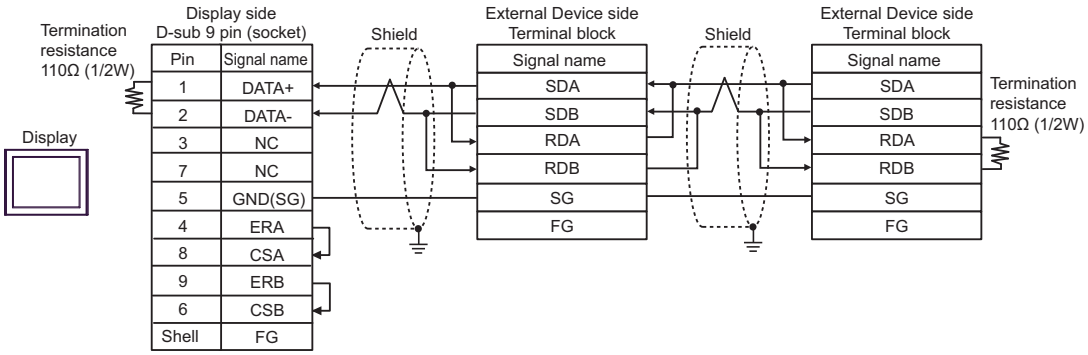

7G)

- 1:1 Connection

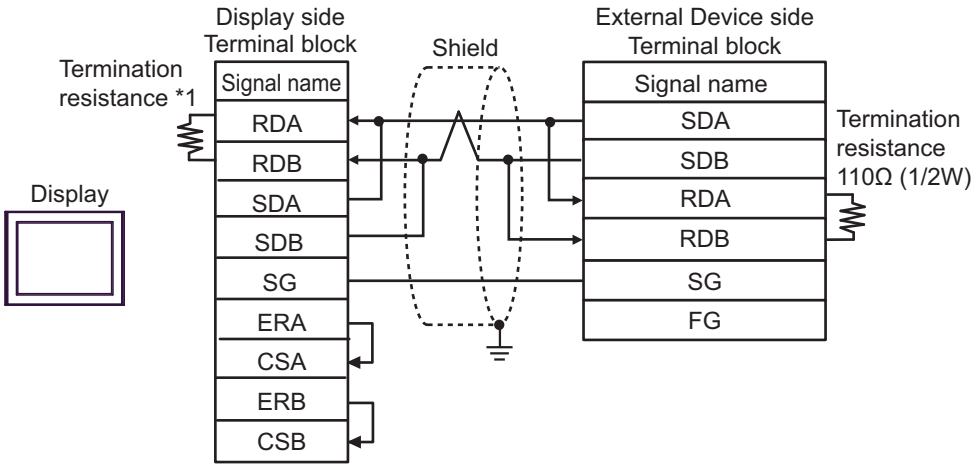

- 1: n Connection

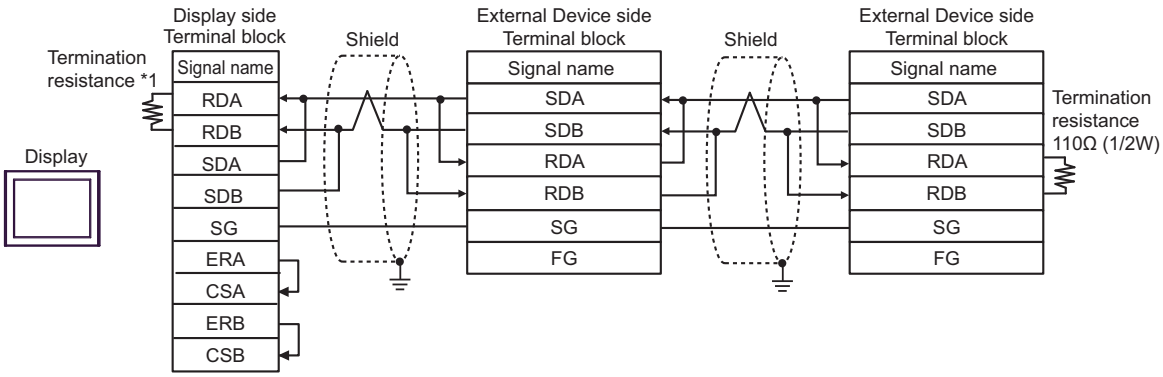

*1 The resistance in the Display is used as the termination resistance. Set the value of the DIP Switch on the rear of the Display as shown in the table below.

DIP Switch No.	Set Value
1	OFF
2	OFF
3	ON
4	ON

7H)

- 1:1 Connection

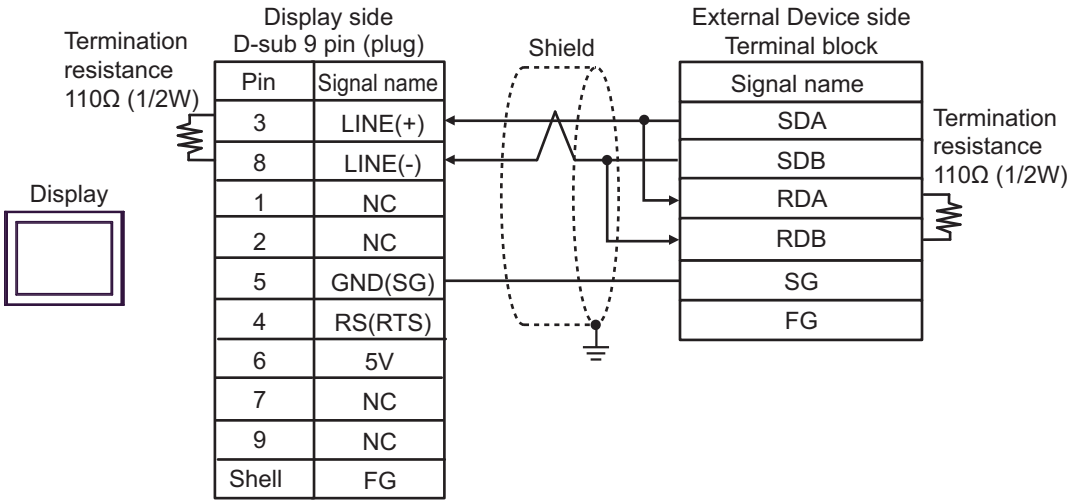

- 1: n Connection

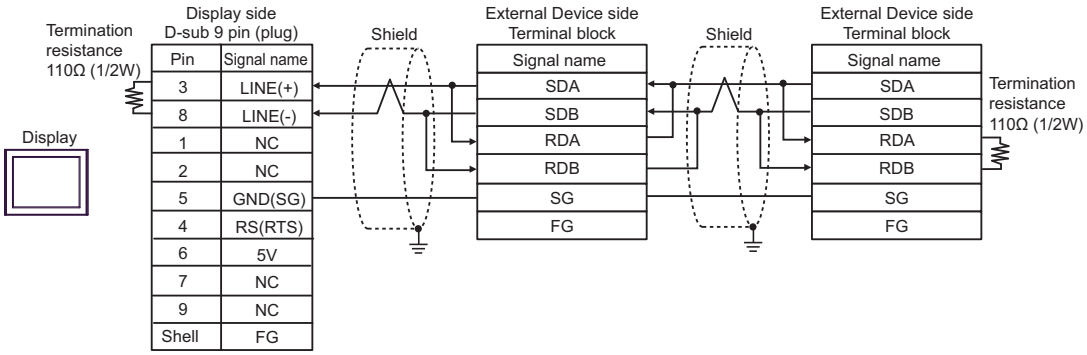

IMPORTANT

- The 5V output (Pin #6) on the Display is the power for the Siemens AG's PROFIBUS connector. Do not use it for other devices.

NOTE

- In COM on the GP-4107, the SG and FG terminals are isolated.

7l)

- 1:1 Connection

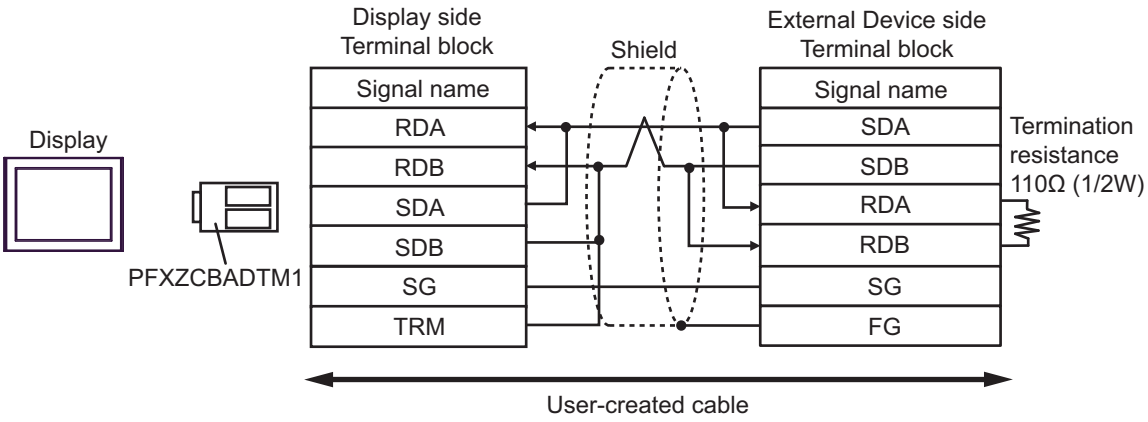

- 1: n Connection

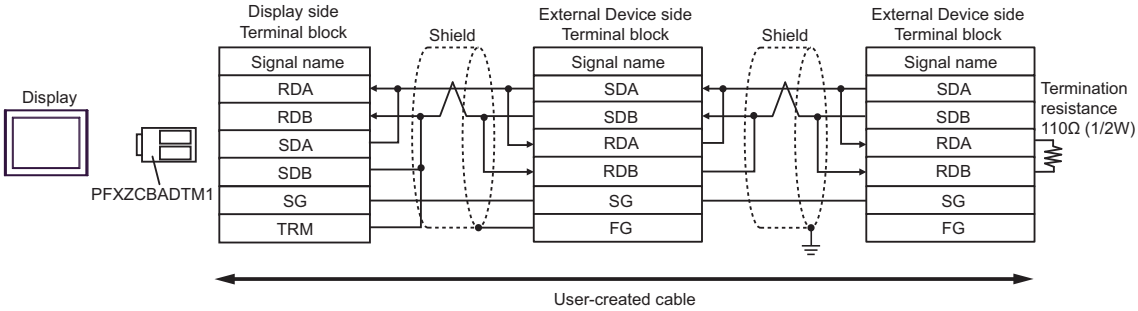

7J)

- 1:1 Connection

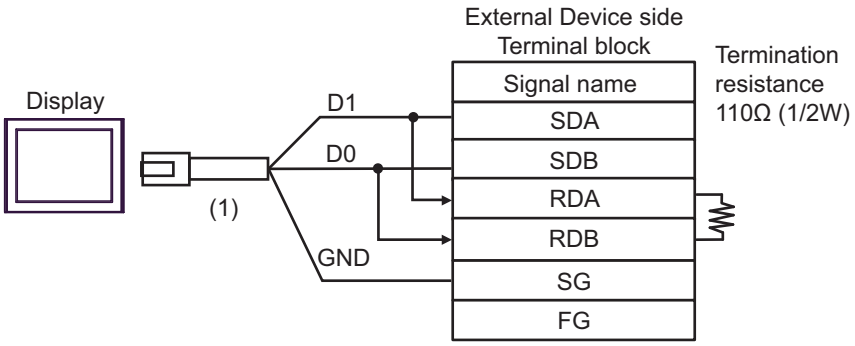

- 1: n Connection

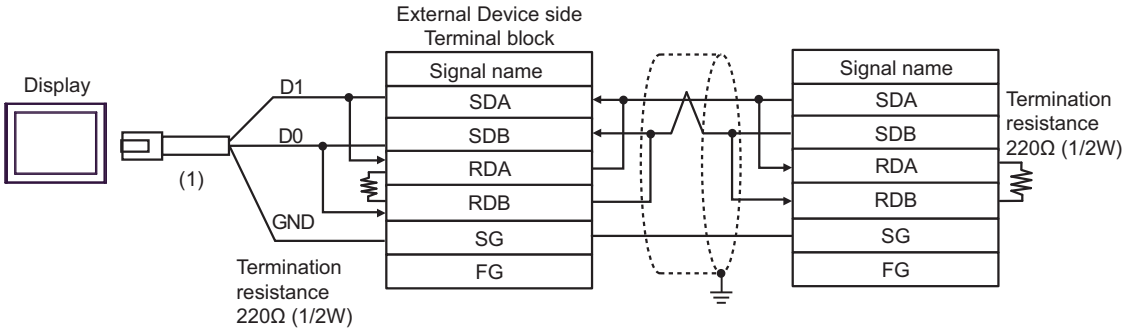

Legend	Name	Notes
(1)	RJ45 RS-485 Cable (5m) by Pro-face PFXZLMCBRJR81	

7K)

- 1:1 Connection

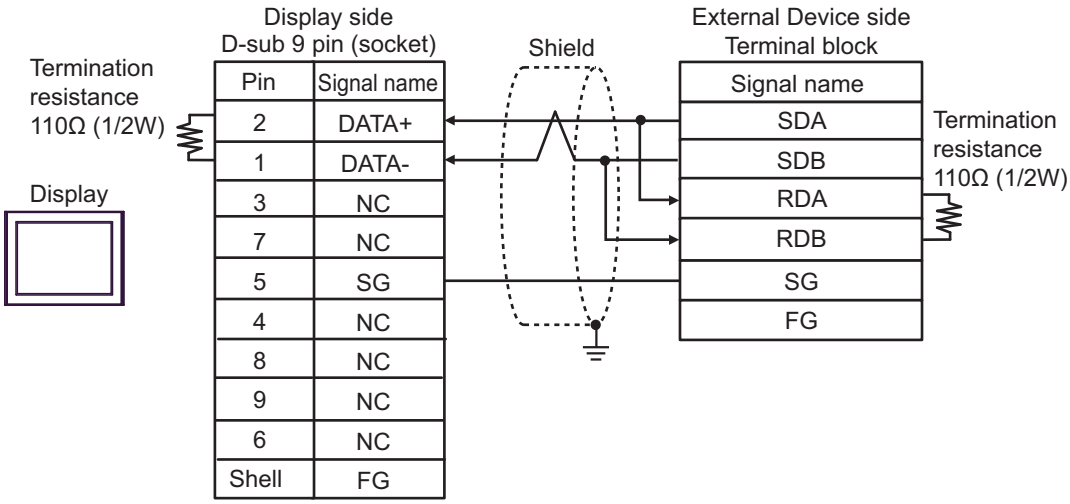

- 1: n Connection

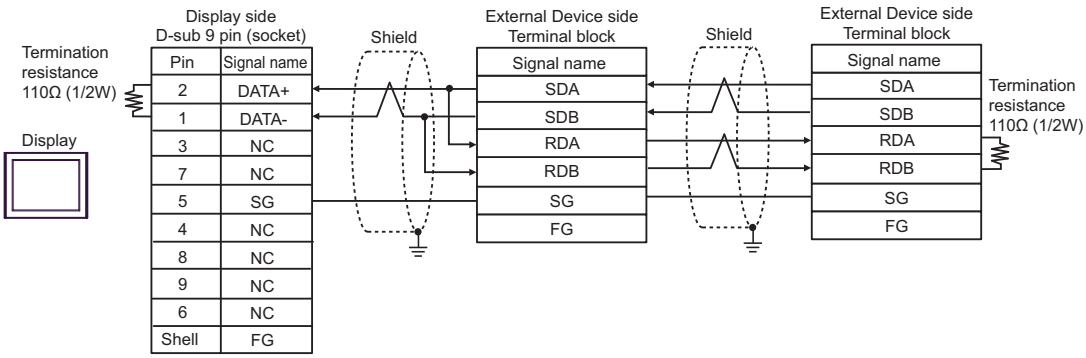

6.8 Cable Diagram 8

Display (Connection Port)	Cable		Remarks
GP3000 (COM1) GP4000*1 (COM1) GP6000 (COM1) SP5000*2 (COM1/2) SP-5B00 (COM1) ST3000 (COM1) ST6000 (COM1) STM6000 (COM1) STC6000 (COM1) ET6000 (COM1) LT3000 (COM1) IPC*3 PC/AT	8A	RS232C conversion unit by IAI Corporation RCB-CV-MW + Communication cable by IAI Corporation CB-RCA-SIO050	
GP-4105 (COM1) GP-4115T (COM1) GP-4115T3 (COM1)	8B	User created cable + RS232C conversion unit by IAI Corporation RCB-CV-MW + Communication cable by IAI Corporation CB-RCA-SIO050	The cable length must be 15m maximum.
LT-4*01TM (COM1) LT-Rear Module (COM1)	8C	RJ45 RS-232C Cable (5m) by Pro-face PFXZLMCBRJR21 + RS232C conversion unit by IAI Corporation RCB-CV-MW + Communication cable by IAI Corporation CB-RCA-SIO050	Cable length from Display to RS232C conversion unit 5m or less

*1 All GP4000 models except GP-4100 series and GP-4203T

*2 Except SP-5B00

*3 Only the COM port which can communicate by RS-232C can be used.
■ IPC COM Port (page 9)

NOTE

- RS232C conversion unit (RCB-CV-MW) and communication cable (CB-RCA-SIO050) are accessories of PC Interface Software (RCM-101-MW) by IAI Corporation.

8A)

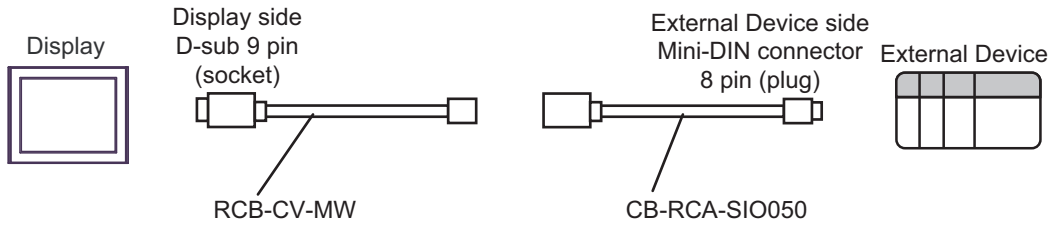

8B)

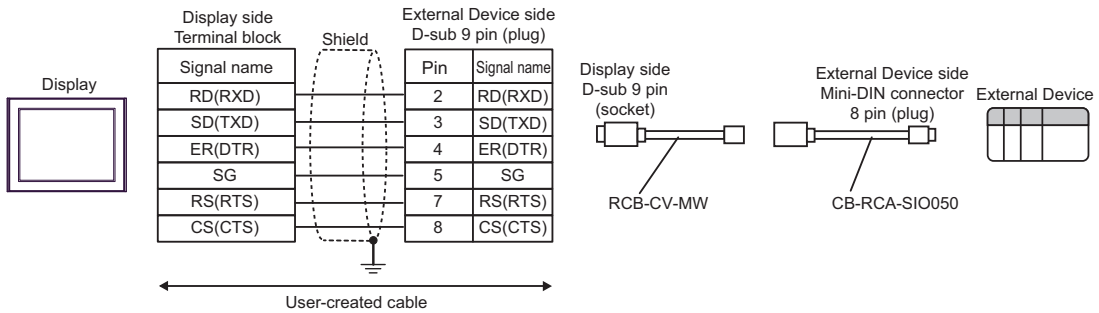

8C)

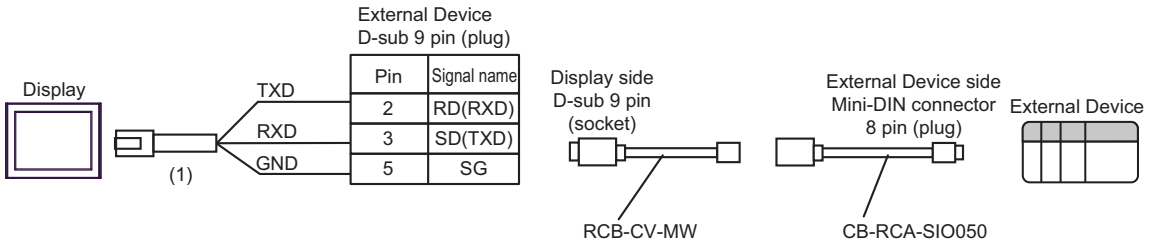

Legend	Name	Notes
(1)	RJ45 RS-232C Cable (5m) by Pro-face PFXZLMCBRJR21	

6.9 Cable Diagram 9

Display (Connection Port)	Cable		Remarks
GP3000*1 (COM1) AGP-3302B (COM2) GP-4*01TM (COM1) GP-Rear Module (COM1) ST3000*2 (COM2) LT3000 (COM1) IPC*3	9A	COM port conversion adapter by Pro-face CA3-ADPCOM-01 + Connector terminal block conversion adapter by Pro-face CA3-ADPTRM-01 + User-created cable	The cable length must be 500m or less.
	9B	User-created cable	
GP3000*1(COM2)	9C	Online adapter by Pro-face CA4-ADPONL-01 + Connector terminal block conversion adapter by Pro-face CA3-ADPTRM-01 + User-created cable	The cable length must be 500m or less.
	9D	Online adapter by Pro-face CA4-ADPONL-01 + User-created cable	
GP-4106 (COM1) GP-4116T (COM1)	9E	User-created cable	The cable length must be 500m or less.
GP4000*4 (COM2) GP-4201T (COM1) GP6000 (COM2) SP5000 (COM1/2)*5 (COM1/2) SP-5B00 (COM2) ST6000*6 (COM2) ST-6200 (COM1) STM6000 (COM1) STC6000 (COM1) ET6000*7 (COM2) PS6000 (Basic Box) (COM1/2)	9F	RS-422 Terminal Block Conversion Adapter by Pro-face PFXZCBADTM1*8 + User-created cable	The cable length must be 500m or less.
	9B	User-created cable	
PE-4000B*9 PS5000*9 PS6000 (Optional Interface)*9	9G	User-created cable	The cable length must be 500m or less.

*1 All GP3000 models except AGP-3302B

*2 Except AST-3211A and AST-3302B

*3 Available only with COM ports that support RS-422/485 (4wire). (Except PE-4000B, PS5000, and PS6000)
☞ ■ IPC COM Port (page 9)

*4 All GP4000 models except GP-4100 Series, GP-4*01TM, GP-Rear Module, GP-4201T and GP-4*03T

*5 Except SP-5B00

*6 Except ST-6200

*7 Due to the COM port specifications, flow control is not possible. Omit wiring the control pins on the Display side of the cable diagram.

*8 When using a Terminal Block Conversion Adapter (CA3-ADPTRM-01) instead of the RS-422 Terminal Block Conversion Adapter, refer to Cable Diagram 9A.

*9 Available only with COM ports that support RS-422/485 (4wire).
☞ ■ IPC COM Port (page 9)

IMPORTANT

- Terminal number to be used for communication varies depending on the External Device. Terminal numbers corresponding to each series are shown below.

Pin	KV-L20V KV-L21V	KV-N11L KV-NC20L
SDB(+)	5	2
SDA(-)	3	1
RDB(+)	4	3
RDA(-)	2	4
SG	1	5

NOTE

- Set the PORT2 toggle switch on the External Device to "422A 485(4)". Also, turn ON the switch of the terminator.
- Pay attention that pole A and pole B are reversely named for the Display and the External Device.

9A)

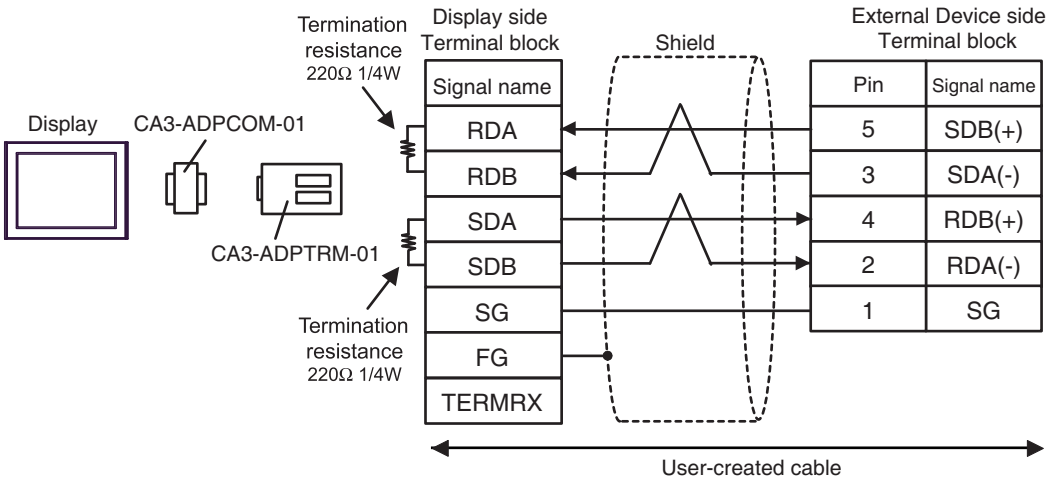
Termination resistance 220Ω 1/4W
Display side Terminal block
Shield
External Device side Terminal block
Display
CA3-ADPCOM-01
CA3-ADPTRM-01
Signal name
RDA
RDB
SDA
SDB
SG
FG
TERMRX
Pin
Signal name
5
SDB(+)
3
SDA(-)
4
RDB(+)
2
RDA(-)
1
SG
Termination resistance 220Ω 1/4W
User-created cable

9B)

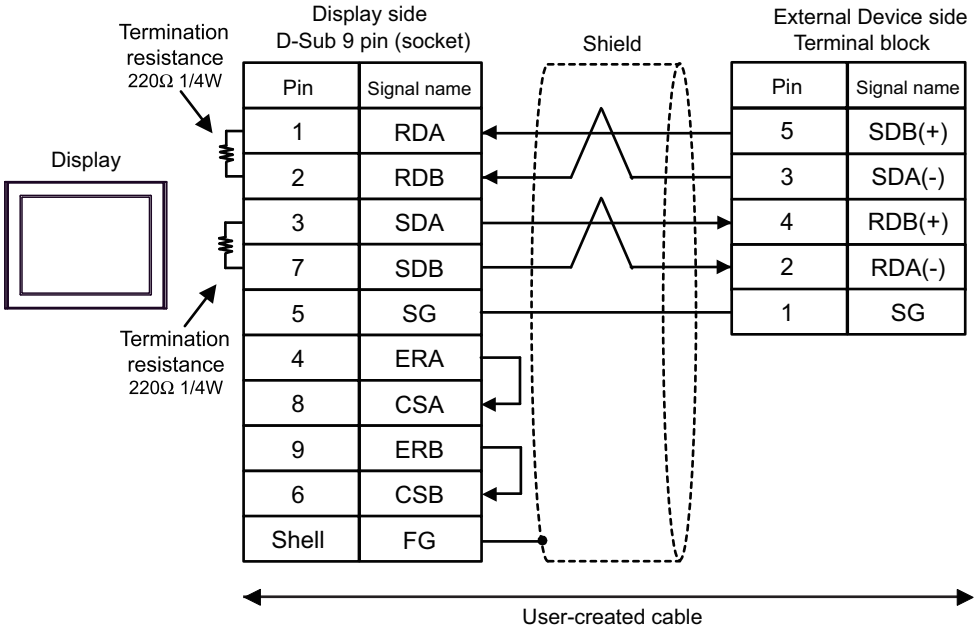
Termination resistance 220Ω 1/4W
Display side D-Sub 9 pin (socket)
Shield
External Device side Terminal block
Display
Pin
Signal name
1
RDA
2
RDB
3
SDA
7
SDB
5
SG
4
ERA
8
CSA
9
ERB
6
CSB
Shell
FG
Pin
Signal name
5
SDB(+)
3
SDA(-)
4
RDB(+)
2
RDA(-)
1
SG
Termination resistance 220Ω 1/4W
User-created cable

9C)

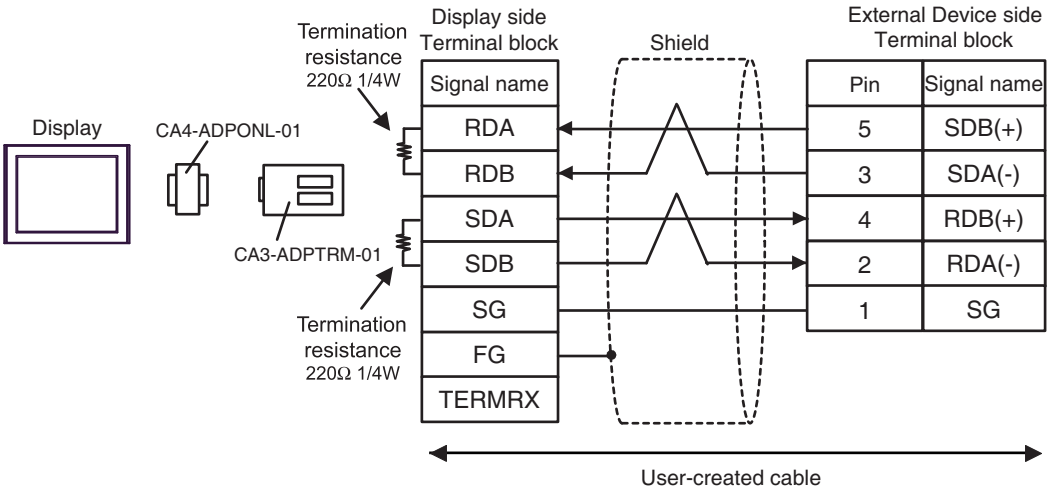
Display side
Terminal block
Termination resistance 220Ω 1/4W
Shield
External Device side
Terminal block
Display
CA4-ADPONL-01
CA3-ADPTRM-01
Signal name
RDA
RDB
SDA
SDB
SG
FG
TERMRX
Pin
Signal name
5
SDB(+)
3
SDA(-)
4
RDB(+)
2
RDA(-)
1
SG
Termination resistance 220Ω 1/4W
User-created cable

9D)

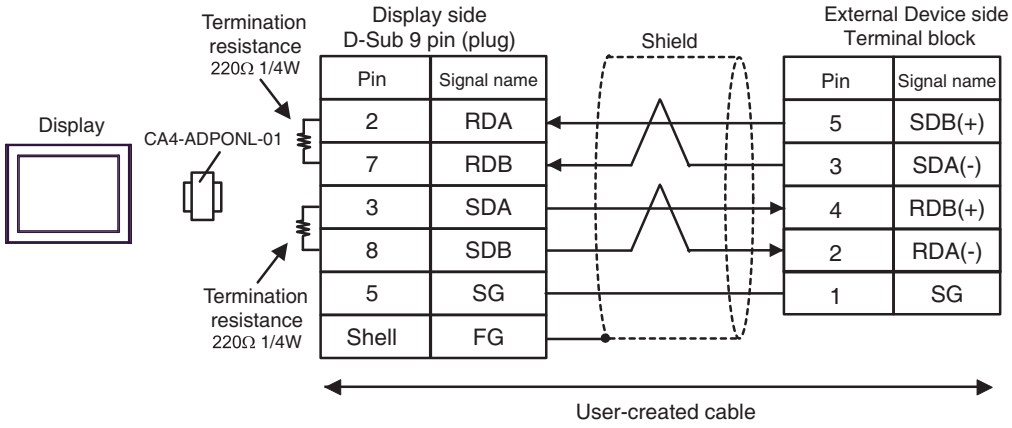
Termination resistance 220Ω 1/4W
Display side
D-Sub 9 pin (plug)
Shield
External Device side
Terminal block
Display
CA4-ADPONL-01
Pin
Signal name
2
RDA
7
RDB
3
SDA
8
SDB
5
SG
Shell
FG
Pin
Signal name
5
SDB(+)
3
SDA(-)
4
RDB(+)
2
RDA(-)
1
SG
Termination resistance 220Ω 1/4W
User-created cable

9E)

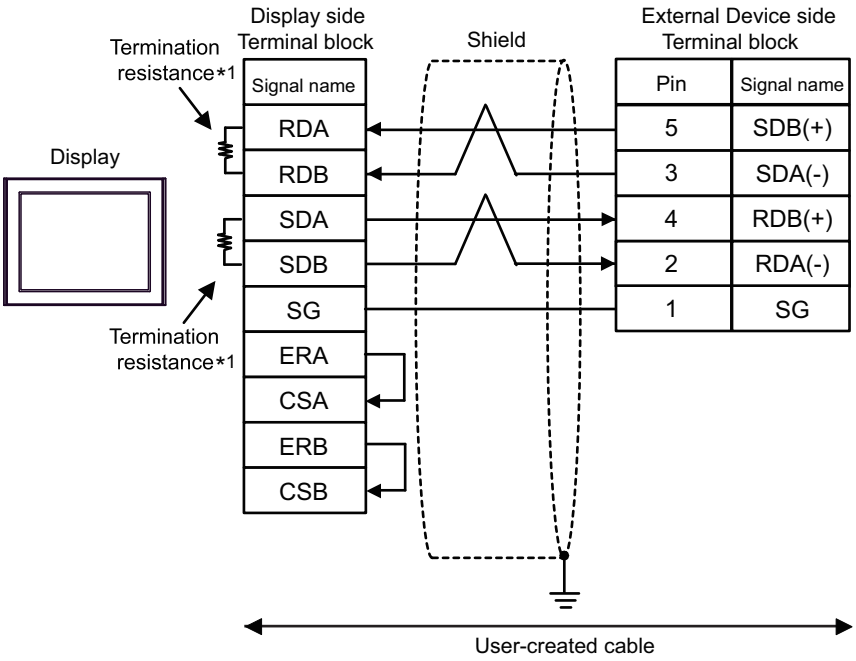

*1 The resistance in the Display is used as the termination resistance. Set the value of the DIP Switch on the rear of the Display as shown in the table below.

DIP Switch No.	Set Value
1	OFF
2	ON
3	OFF
4	ON

9F)

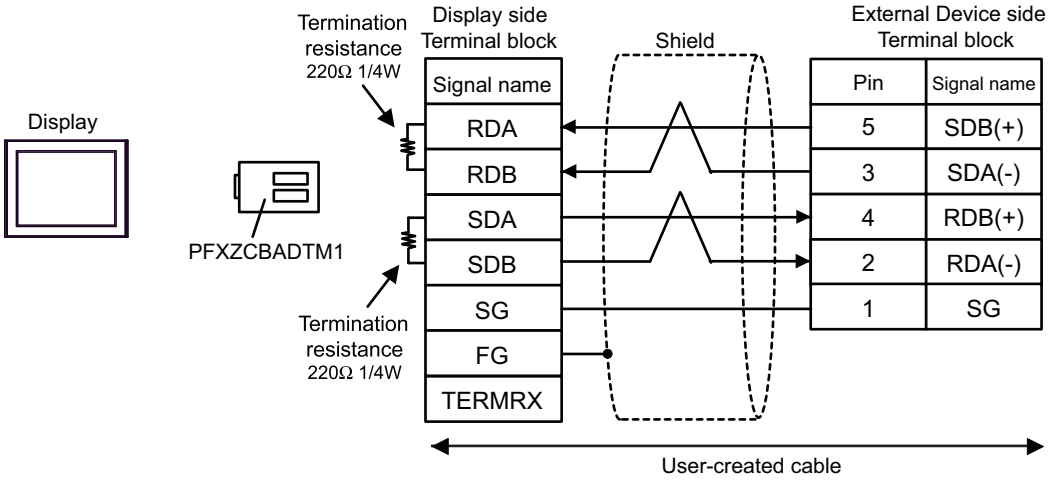

9G)

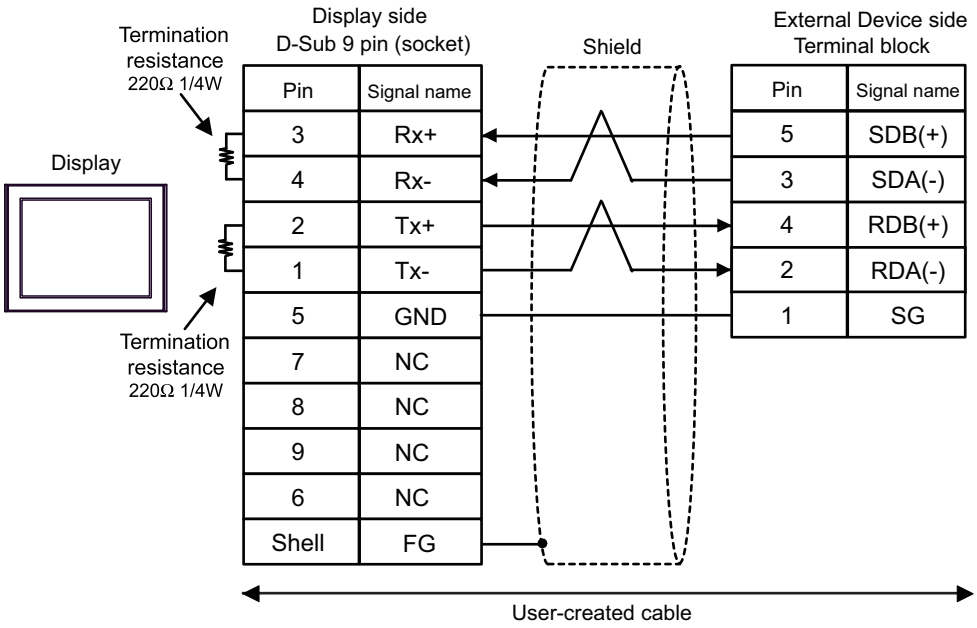
Display side
D-Sub 9 pin (socket)
Shield
External Device side
Terminal block
Termination resistance
220Ω 1/4W
Display
Termination resistance
220Ω 1/4W
Pin
Signal name
3 Rx+
4 Rx-
2 Tx+
1 Tx-
5 GND
7 NC
8 NC
9 NC
6 NC
Shell FG
Pin
Signal name
5 SDB(+)
3 SDA(-)
4 RDB(+)
2 RDA(-)
1 SG
User-created cable

6.10 Cable Diagram 10

Display (Connection Port)	Cable		Notes
GP3000*1 (COM1) AGP-3302B (COM2) GP-4*01TM (COM1) GP-Rear Module (COM1) ST3000*2 (COM2) LT3000 (COM1) IPC*3	10A	COM Port Conversion Adapter by Pro-face CA3-ADPCOM-01 + Terminal Block Conversion Adapter by Pro-face CA3-ADPTRM-01 + User-created cable	The cable length must be 500m or less.*4
	10B	User-created cable	
GP3000*5 (COM2)	10C	Online Adapter by Pro-face CA4-ADPONL-01 + Terminal Block Conversion Adapter by Pro-face CA3-ADPTRM-01 + User-created cable	The cable length must be 500m or less.*4
	10D	Online Adapter by Pro-face CA4-ADPONL-01 + User-created cable	
GP-4106 (COM1) GP-4116T (COM1)	10E	User-created cable	The cable length must be 500m or less.*4
GP4000*6 (COM2) GP-4201T (COM1) GP6000 (COM2) SP5000*7 (COM1/2) SP-5B00 (COM2) ST6000*8 (COM2) ST-6200 (COM1) STM6000 (COM1) STC6000 (COM1) ET6000*9 (COM2) PS6000 (Basic Box) (COM1/2)	10F	RS-422 Terminal Block Conversion Adapter by Pro-face PFXZCBADTM1 *10 + User-created cable	The cable length must be 500m or less.*4
	10B	User-created cable	
PE-4000B*11 PS5000*11 PS6000 (Optional Interface)*11	10G	User-created cable	The cable length must be 500m or less.*4

*1 All GP3000 models except AGP-3302B

*2 Except AST-3211A and AST-3302B

*3 Only the COM port which can communicate by RS-422/485 (4 wire) can be used. (Except PE-4000B, PS5000, and PS6000)

■ IPC COM Port (page 9)

*4 When using CJ1W-CIF11, the cable length must be 50 meters or less.

*5 All GP3000 models except GP-3200 series and AGP-3302B

*6 All GP4000 models except GP-4100 series, GP-4*01TM, GP-Rear Module, GP-4201T and GP-4*03T

*7 Except SP-5B00

*8 Except ST-6200

*9 Due to the COM port specifications, flow control is not possible. Omit wiring the control pins on the Display side of the cable diagram.

*10 When using a Terminal Block Conversion Adapter (CA3-ADPTRM-01) instead of the RS-422 Terminal Block Conversion Adapter, refer to Cable Diagram 10A.

*11 Only the COM port which can communicate by RS-422/485 (4 wire) can be used.

■ IPC COM Port (page 9)

IMPORTANT

- Please turn ON the termination resistance switch on the PLC.
- Set the 2wire/4wire toggle switch to 4wire.
- Note that pole A and pole B are reversely named for the Display and the External Device.

10A)

- 1:1 connection

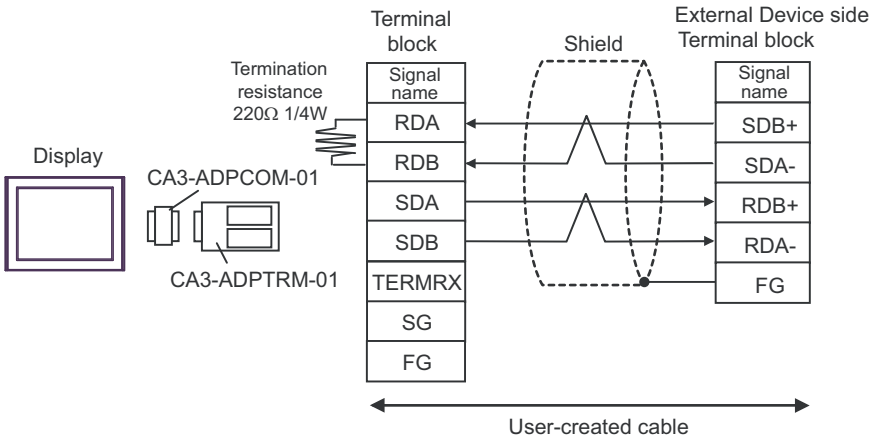

- 1:n connection

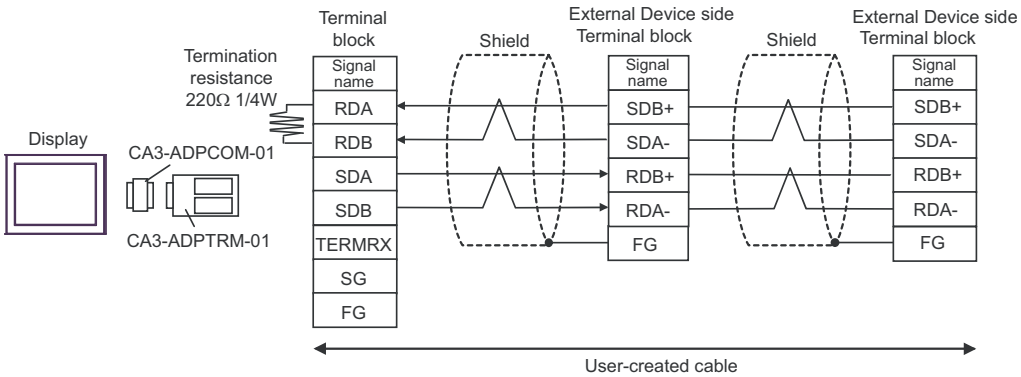

NOTE

- When the display unit you use is an IPC, turn ON the DIP switch 6 to insert the termination resistance.
- The cable length must be 500m or less.

10B)

- 1:1 connection

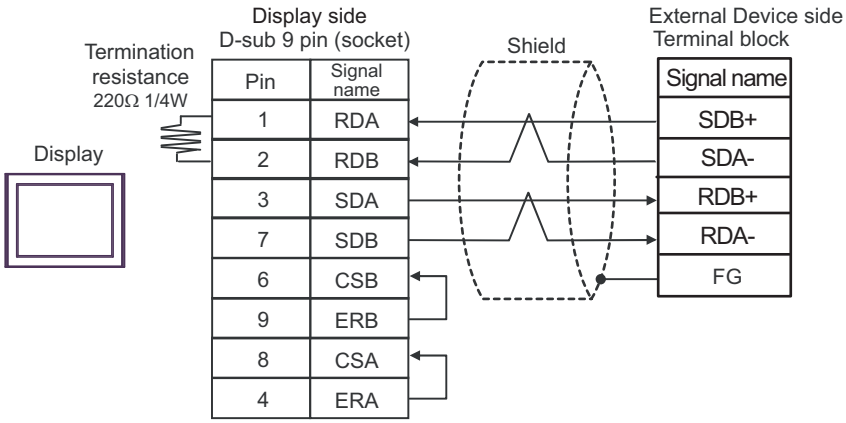

- 1:n connection

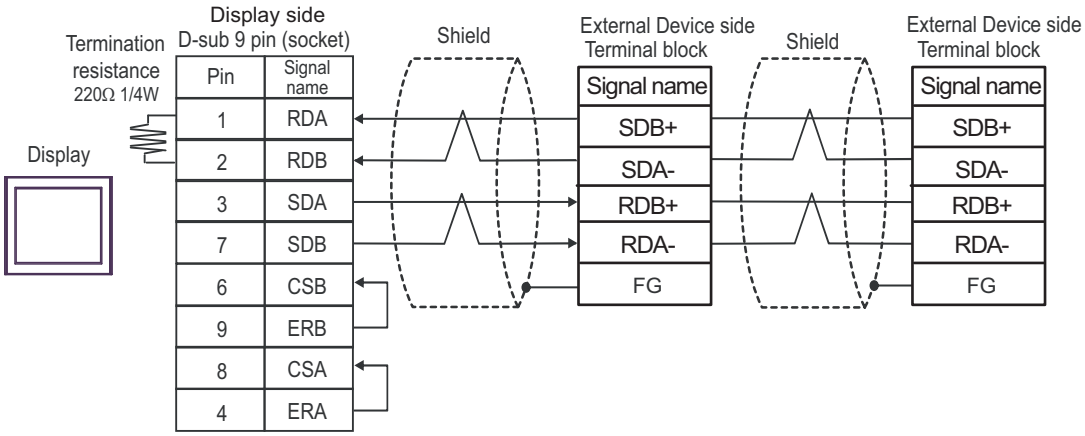

NOTE

- When the display unit you use is an IPC, turn ON the DIP switch 6 to insert the termination resistance.

10C)

- 1:1 connection

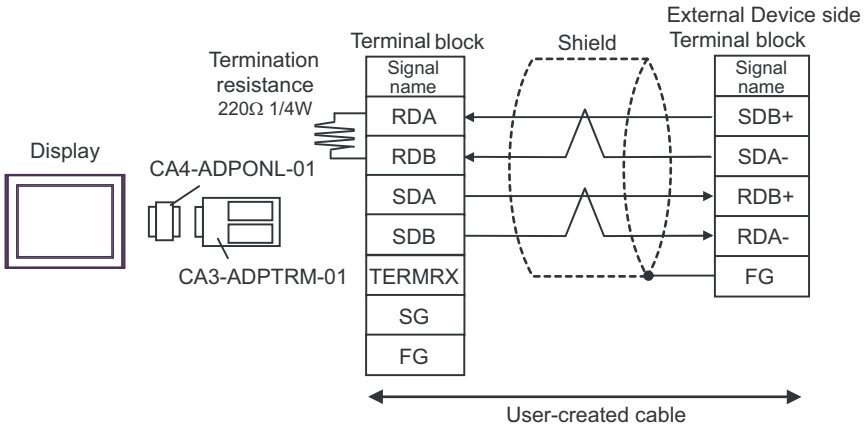

- 1:n connection

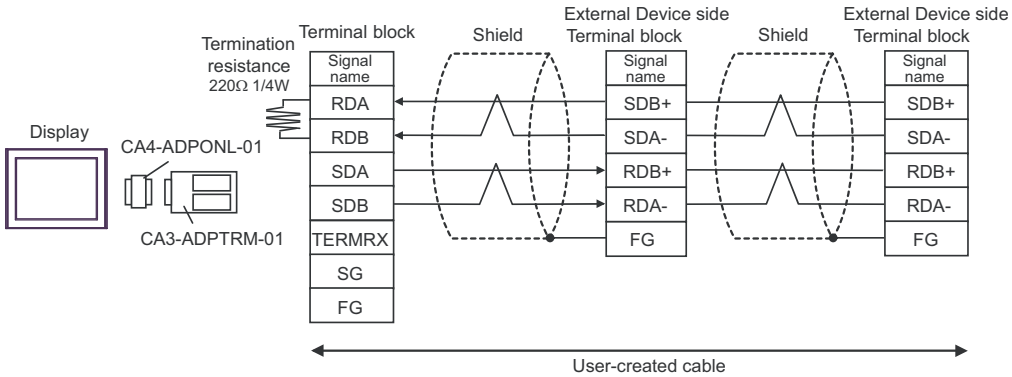

10D)

- 1:1 connection

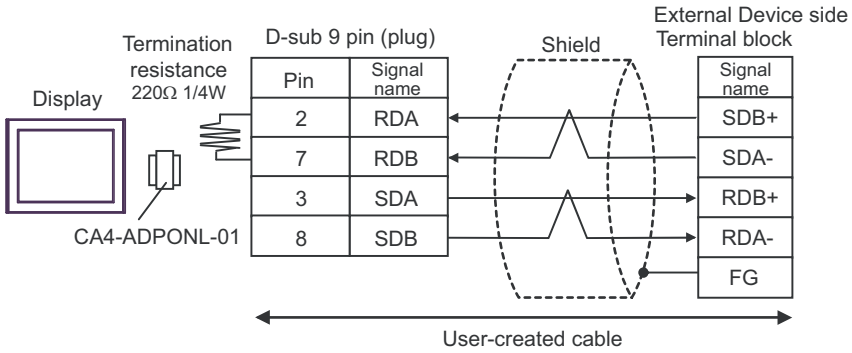

- 1:n connection

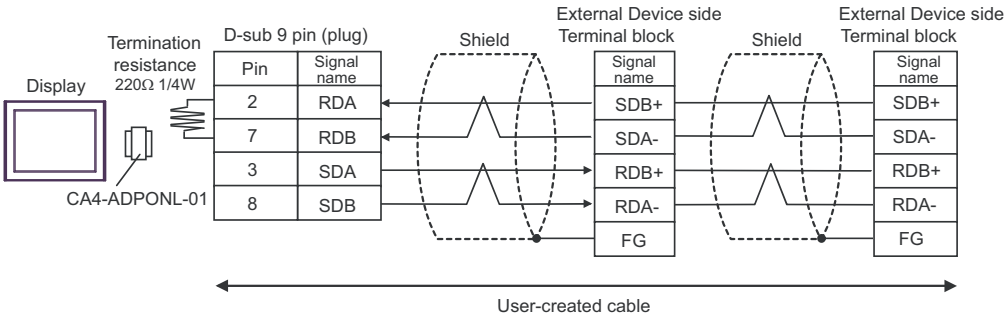

10E)

- 1:1 connection

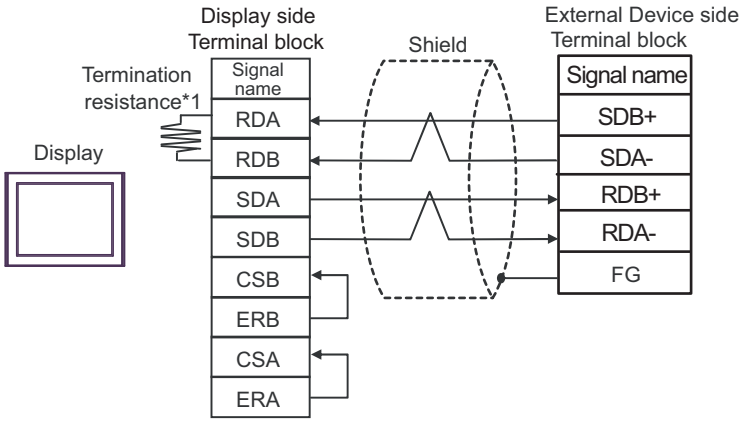

- 1:n connection

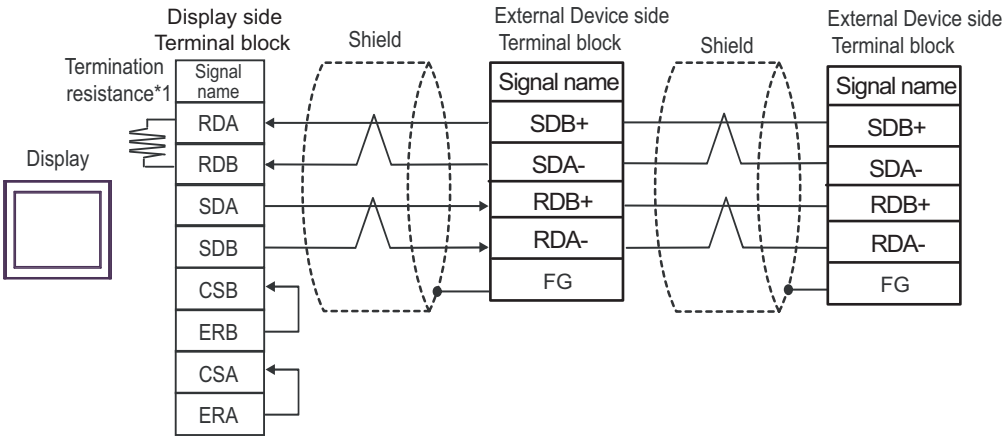

*1 The resistance in the Display is used as the termination resistance. Set the value of the DIP Switch on the rear of the Display as shown in the table below.

DIP Switch No.	Set Value
1	OFF
2	OFF
3	OFF
4	ON

10F)

- 1:1 connection

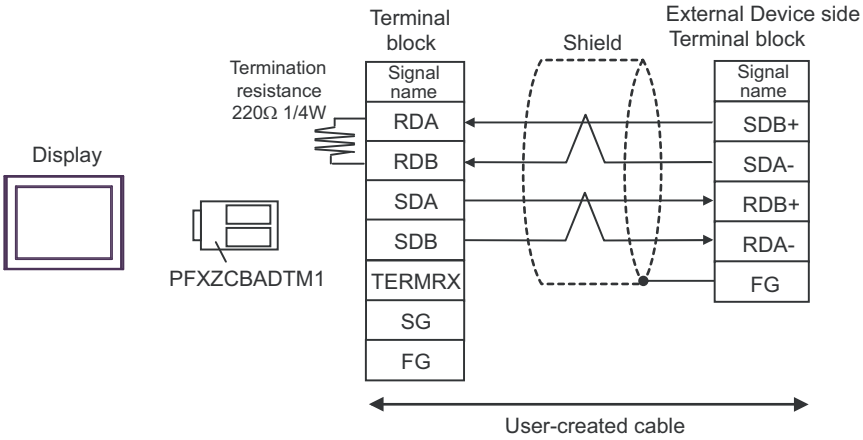

- 1:n connection

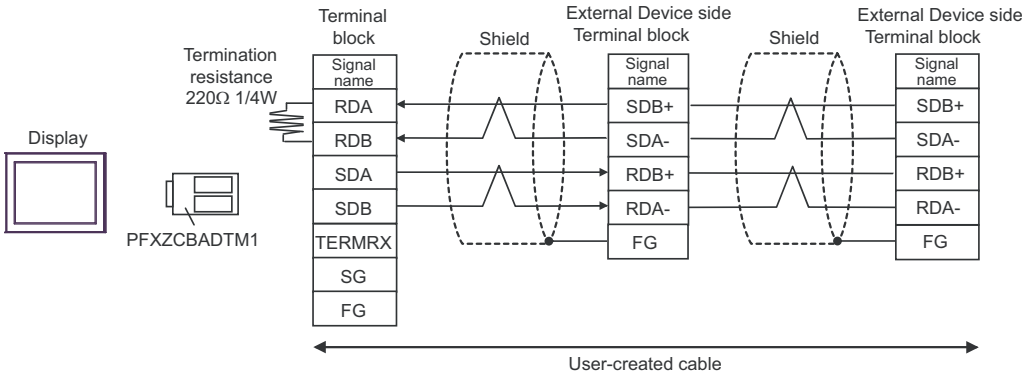

10G)

- 1:1 connection

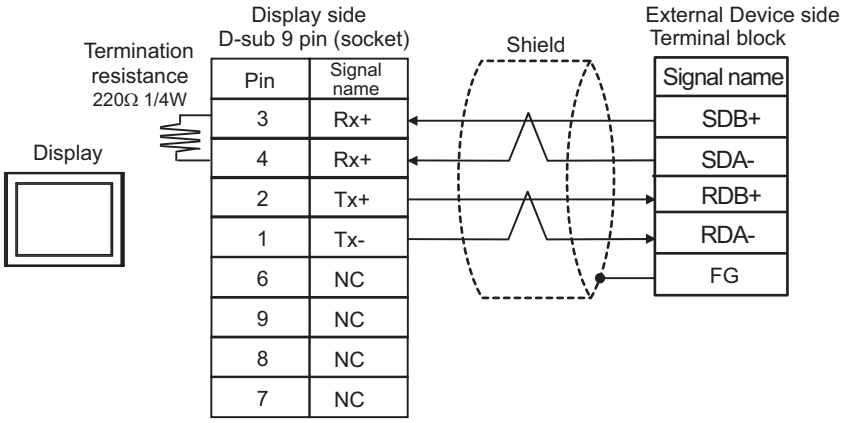

- 1:n connection

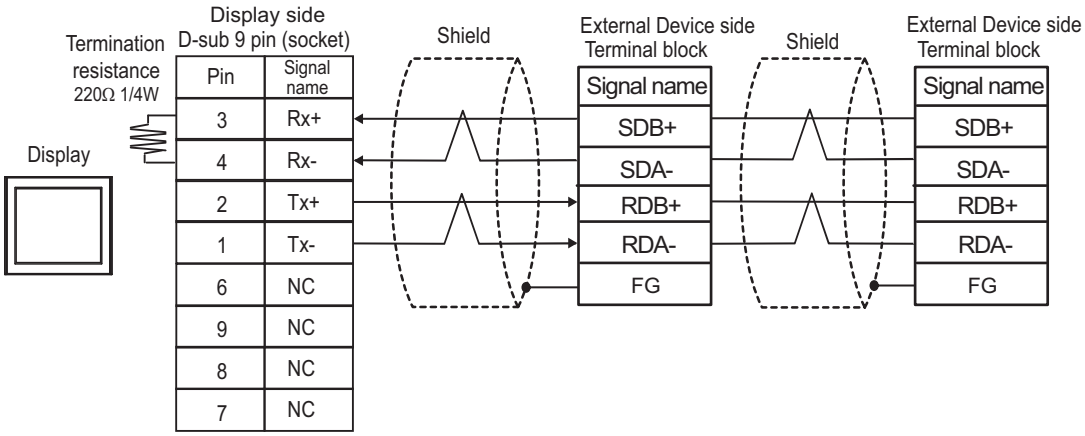

6.11 Cable Diagram 11

Display (Connection Port)	Cable		Notes
GP3000*1 (COM1) AGP-3302B (COM2) GP-4*01TM (COM1) GP-Rear Module (COM1) ST3000*2 (COM2) LT3000 (COM1)	11A	COM Port Conversion Adapter by Pro-face CA3-ADPCOM-01 + Terminal Block Conversion Adapter by Pro-face CA3-ADPTRM-01 + User-created cable	The cable length must be 500m or less.
	11B	User-created cable	
GP3000*3 (COM2)	11C	Online Adapter by Pro-face CA4-ADPONL-01 + Terminal Block Conversion Adapter by Pro-face CA3-ADPTRM-01 + User-created cable	The cable length must be 500m or less.
	11D	Online Adapter by Pro-face CA4-ADPONL-01 + User-created cable	
IPC*4	11E	COM Port Conversion Adapter by Pro-face CA3-ADPCOM-01 + Terminal Block Conversion Adapter by Pro-face CA3-ADPTRM-01 + User-created cable	The cable length must be 500m or less.
	11F	User-created cable	
GP-4106 (COM1) GP-4116T (COM1)	11G	User-created cable	The cable length must be 500m or less.
GP-4107 (COM1) GP-4*03T*5 (COM2) GP-4203T (COM1)	11H	User-created cable	The cable length must be 500m or less.
GP4000*6 (COM2) GP-4201T (COM1) GP6000 (COM2) SP5000*7 (COM1/2) SP-5B00 (COM2) ST6000*8 (COM2) ST-6200 (COM1) STM6000 (COM1) STC6000 (COM1) ET6000*9 (COM2) PS6000 (Basic Box) (COM1/2)	11I	RS-422 Terminal Block Conversion Adapter by Pro-face PFXZCBADTM1 *10 + User-created cable	The cable length must be 500m or less.
	11B	User-created cable	

Display (Connection Port)	Cable		Notes
LT-4*01TM (COM1) LT-Rear Module (COM1)	11J	RJ45 RS-485 Cable (5m) by Pro-face PFXZLMCBRJR81	The cable length must be 500m or less.
PE-4000B*11 PS5000*11 PS6000 (Optional Interface)*11	11K	User-created cable	The cable length must be 500m or less.

*1 All GP3000 models except AGP-3302B

*2 Except AST-3211A and AST-3302B

*3 All GP3000 models except GP-3200 series and AGP-3302B

*4 Only the COM port which can communicate by RS-422/485 (2 wire) can be used. (Except PE-4000B, PS5000, and PS6000)

■ IPC COM Port (page 9)

*5 Except GP-4203T

*6 All GP4000 models except GP-4100 series, GP-4*01TM, GP-Rear Module, GP-4201T and GP-4*03T

*7 Except SP-5B00

*8 Except ST-6200

*9 Due to the COM port specifications, flow control is not possible. Omit wiring the control pins on the Display side of the cable diagram.

*10 When using a Terminal Block Conversion Adapter (CA3-ADPTRM-01) instead of the RS-422 Terminal Block Conversion Adapter, refer to Cable Diagram 11A.

*11 Only the COM port which can communicate by RS-422/485 (2 wire) can be used.

■ IPC COM Port (page 9)

11A)

- 1:1 connection

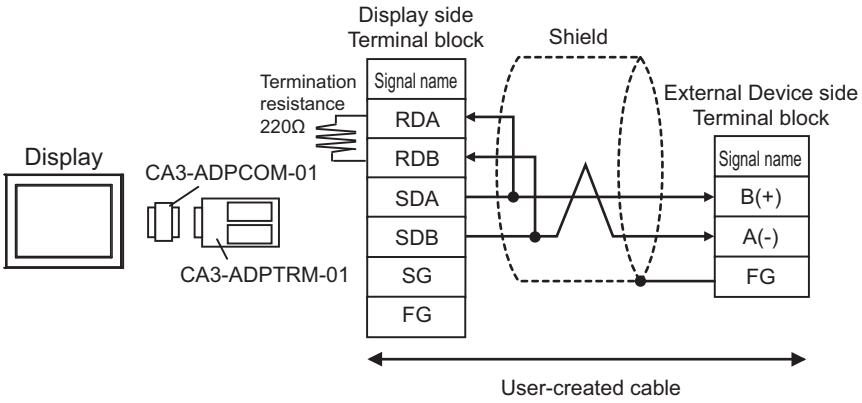

- 1:n connection

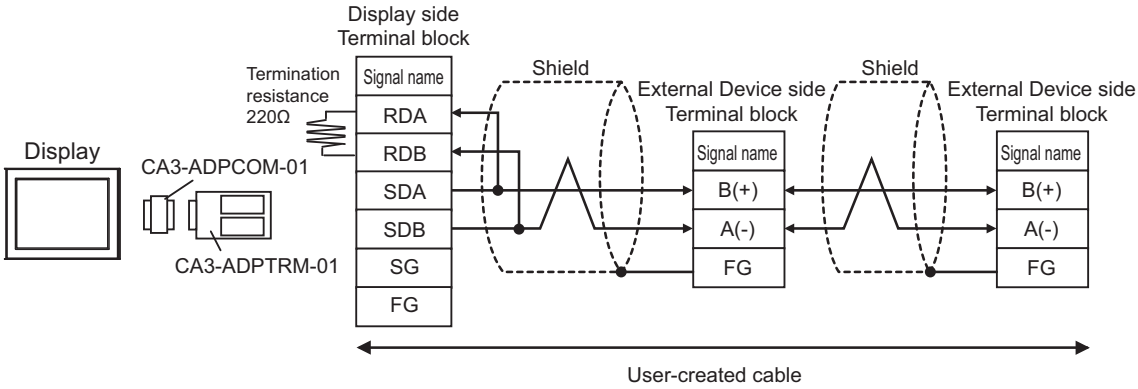

11B)

- 1:1 connection

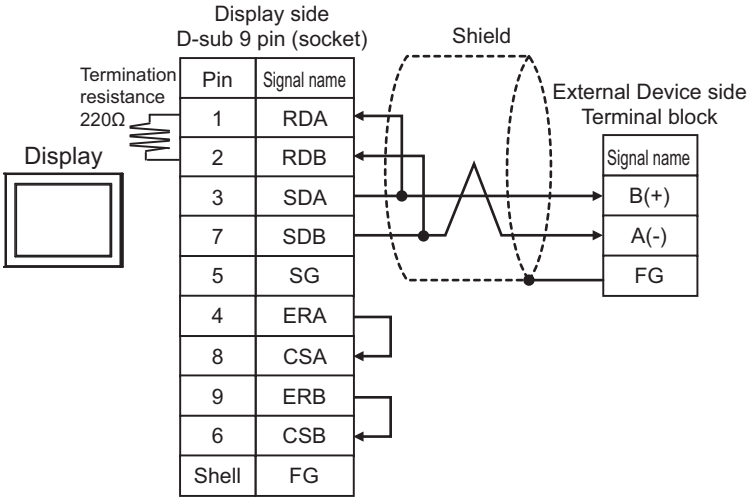

- 1:n connection

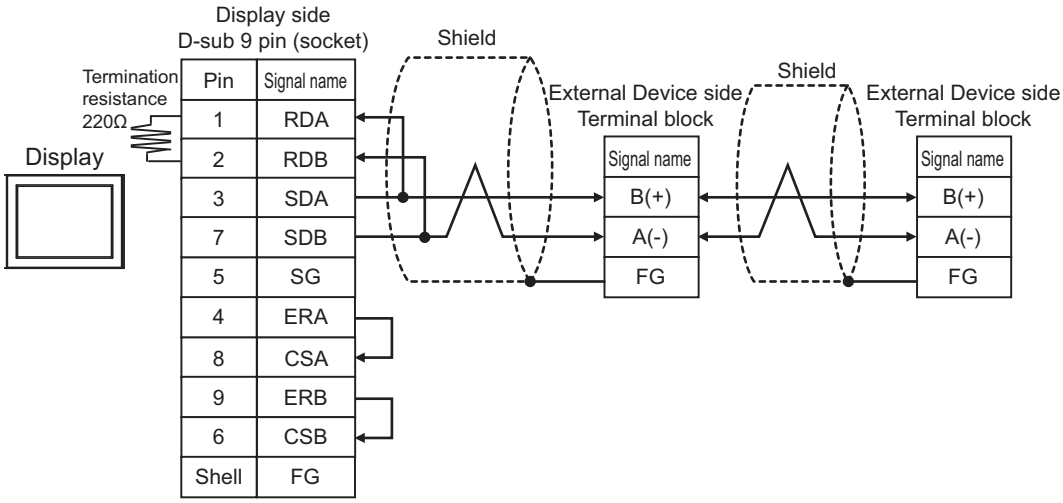

11C)

- 1:1 connection

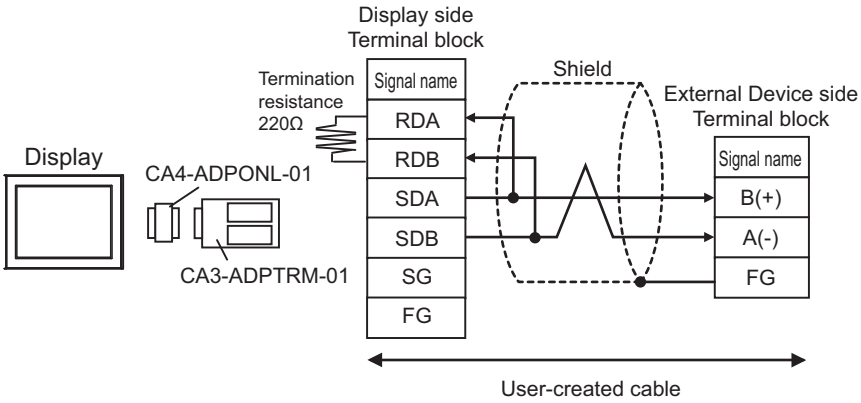

- 1:n connection

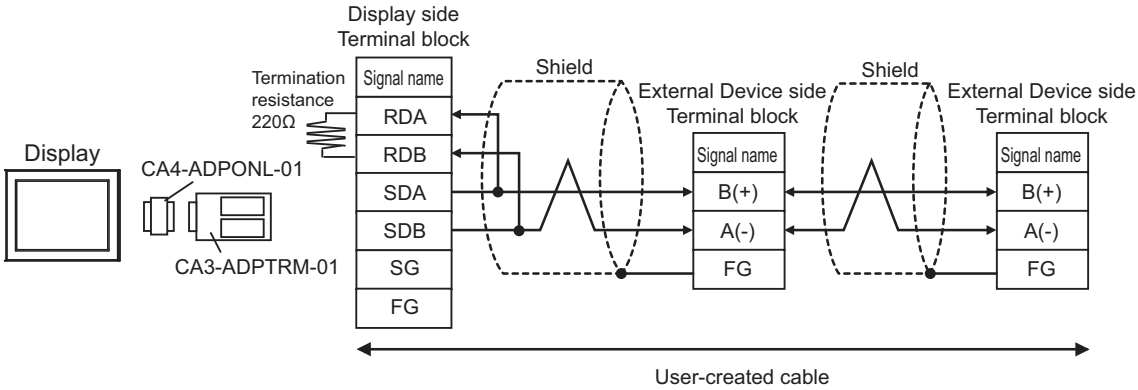

11D)

- 1:1 connection

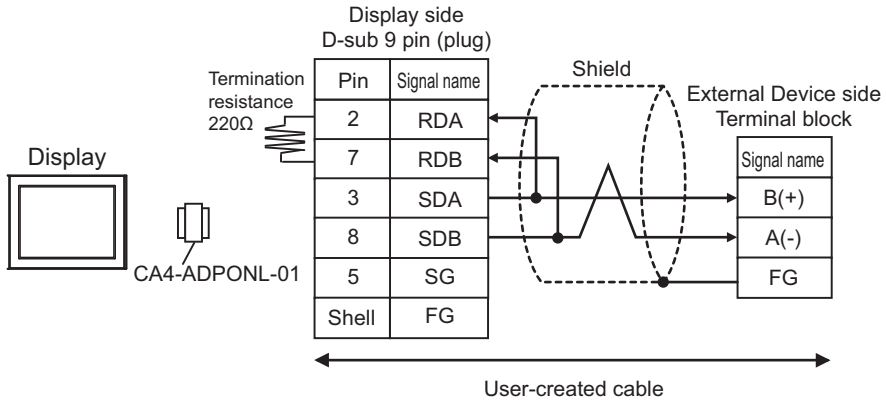

- 1:n connection

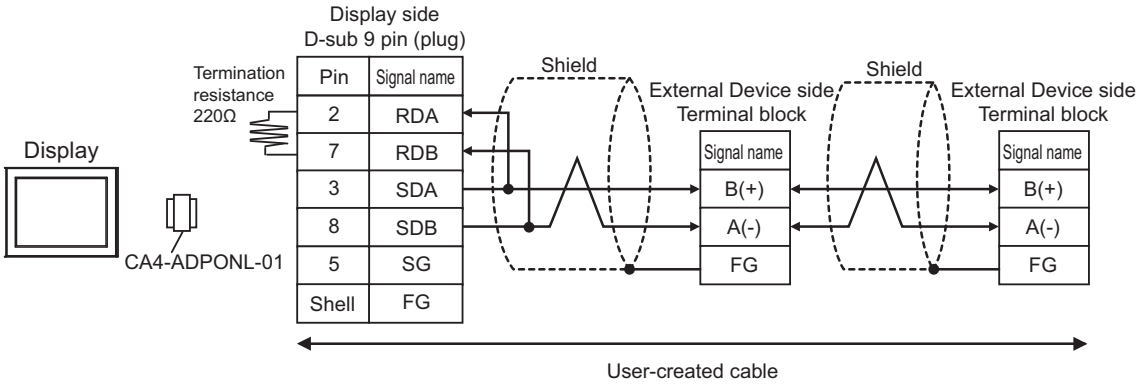

11E)

- 1:1 connection

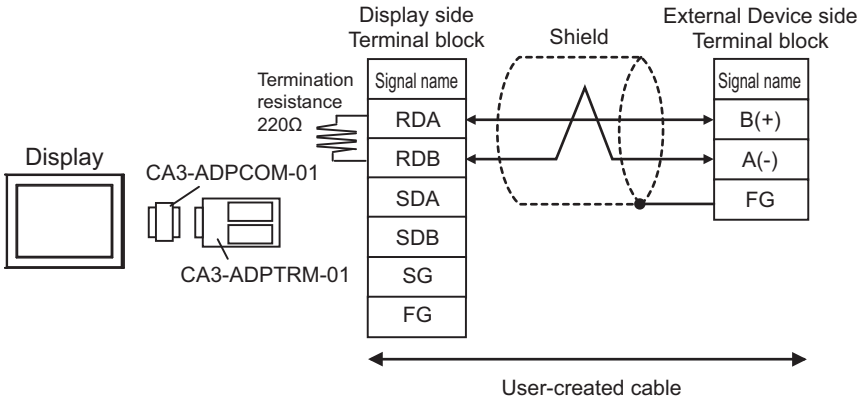

- 1:n connection

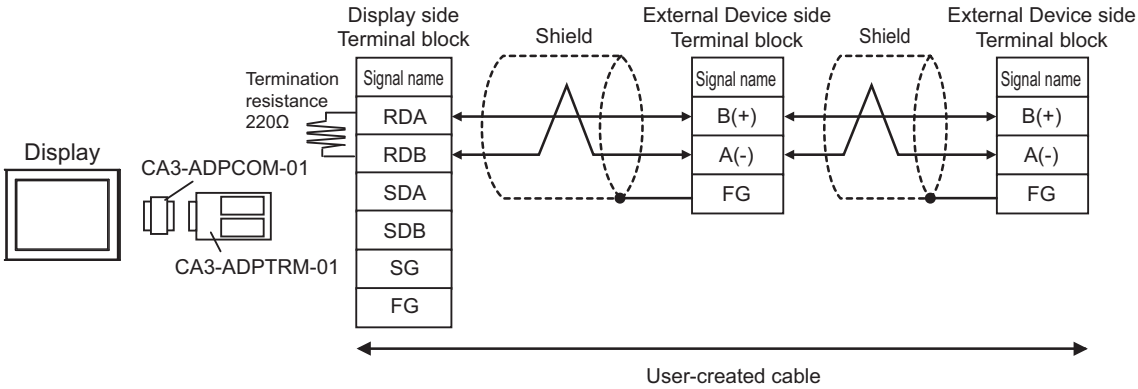

11F)

- 1:1 connection

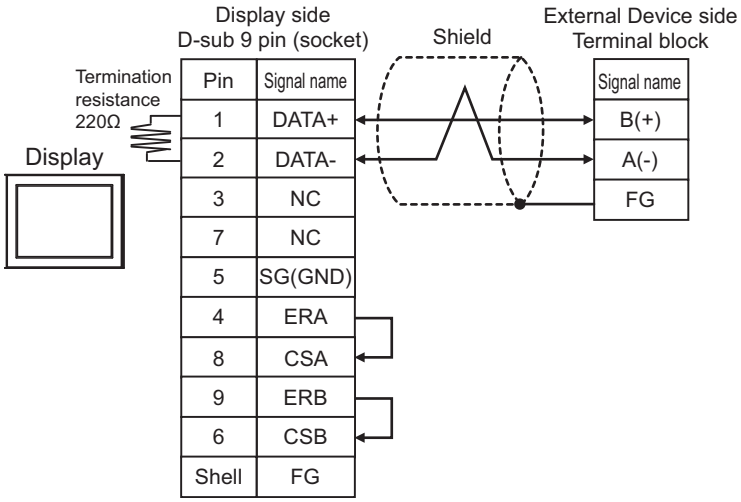

- 1:n connection

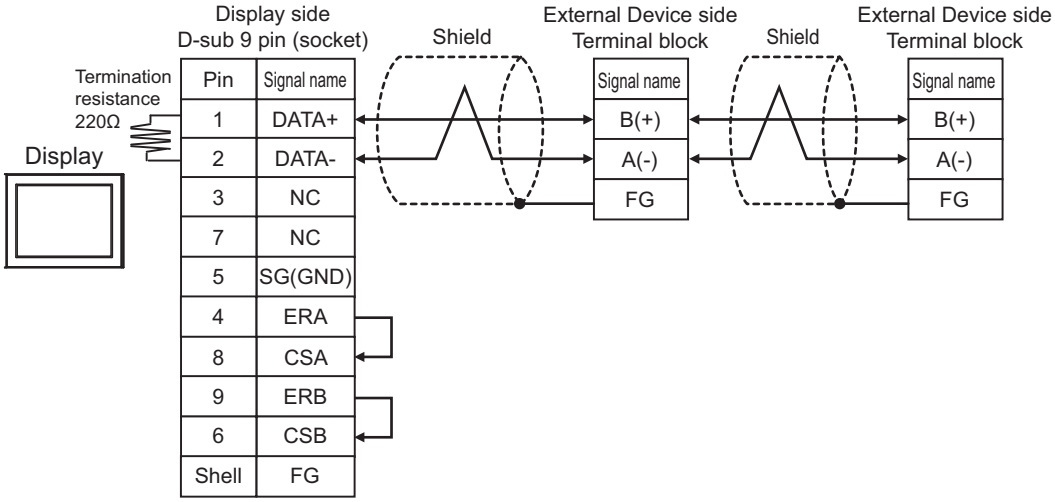

11G)

- 1:1 connection

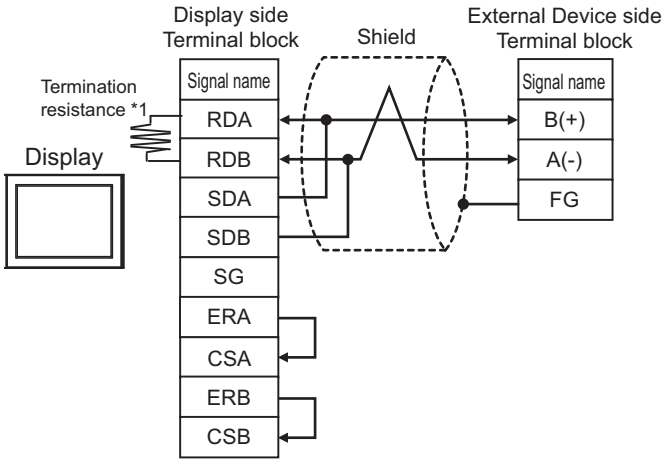

- 1:n connection

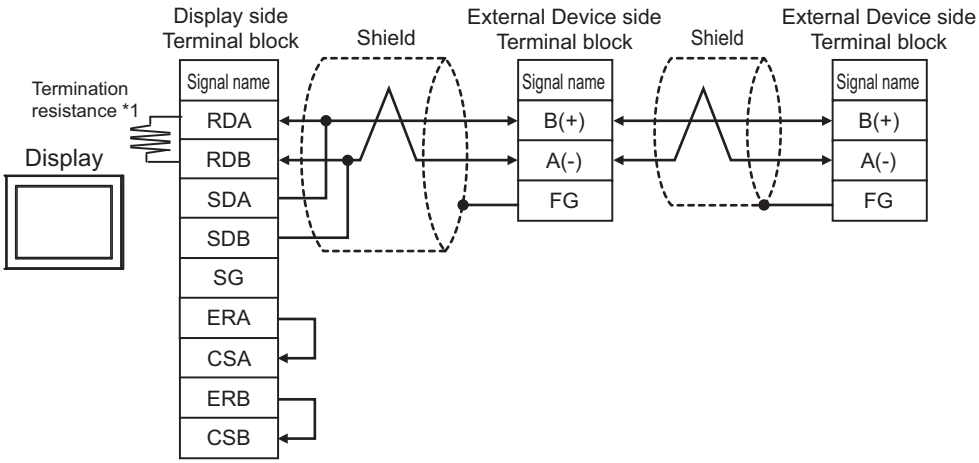

*1 The resistance in the Display is used as the termination resistance. Set the value of the DIP Switch on the rear of the Display as shown in the table below.

DIP Switch No.	Set Value
1	OFF
2	OFF
3	OFF
4	ON

11H)

- 1:1 connection

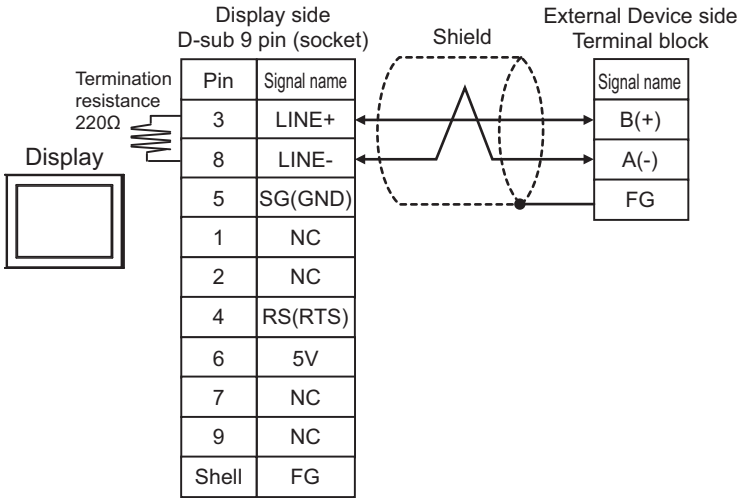

- 1:n connection

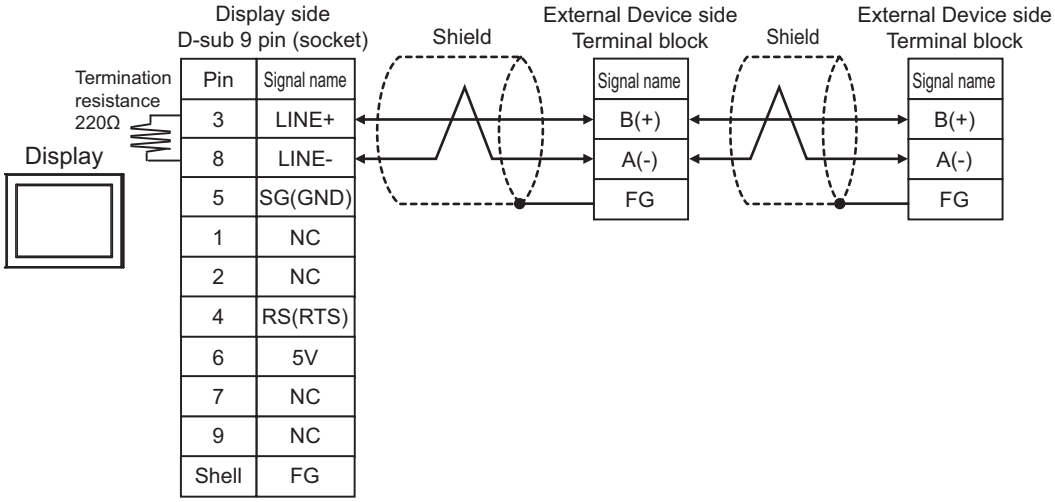

11I)

- 1:1 connection

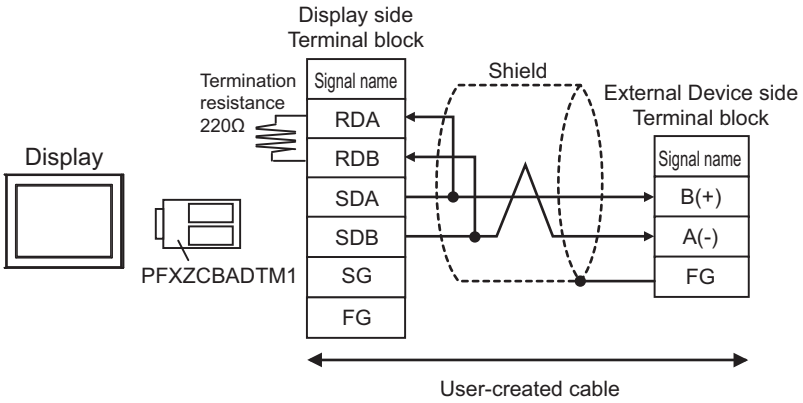

- 1:n connection

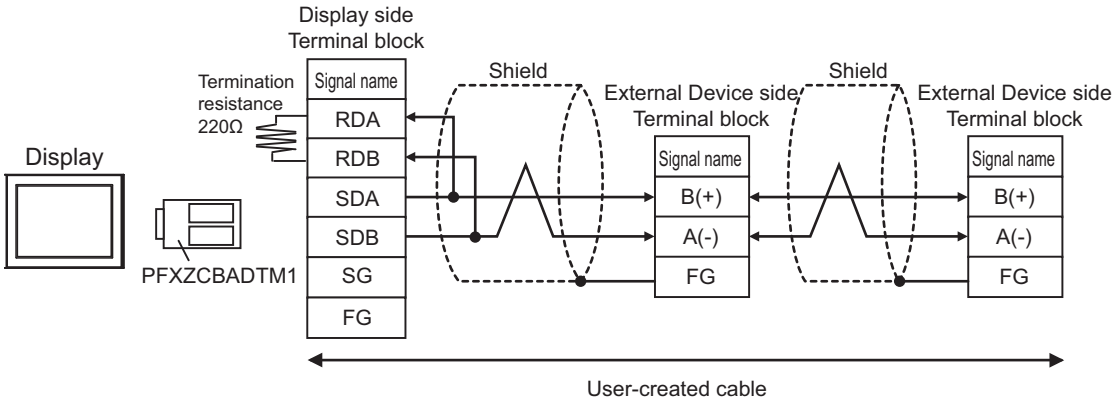

11J)

- 1:1 connection

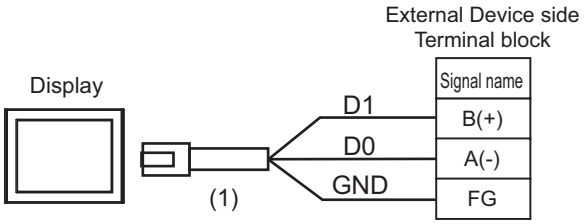

- 1:n connection

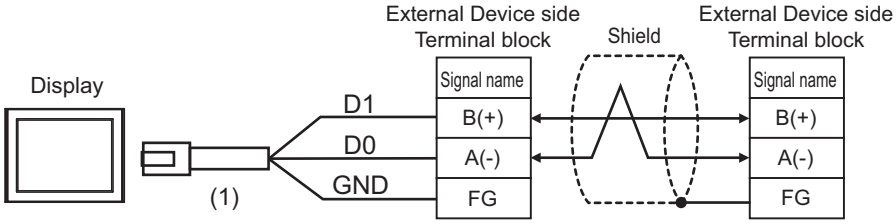

Number	Name	Notes
(1)	RJ45 RS-485 Cable (5m) by Pro-face PFXZLMCBRJR81	

11K)

- 1:1 connection

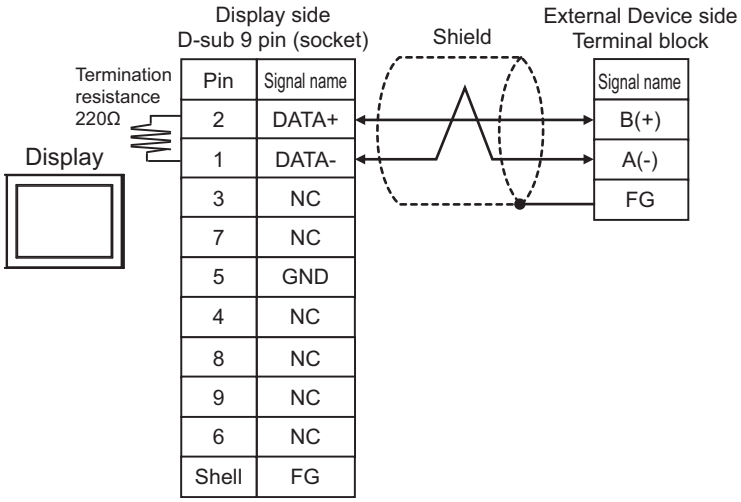

- 1:n connection

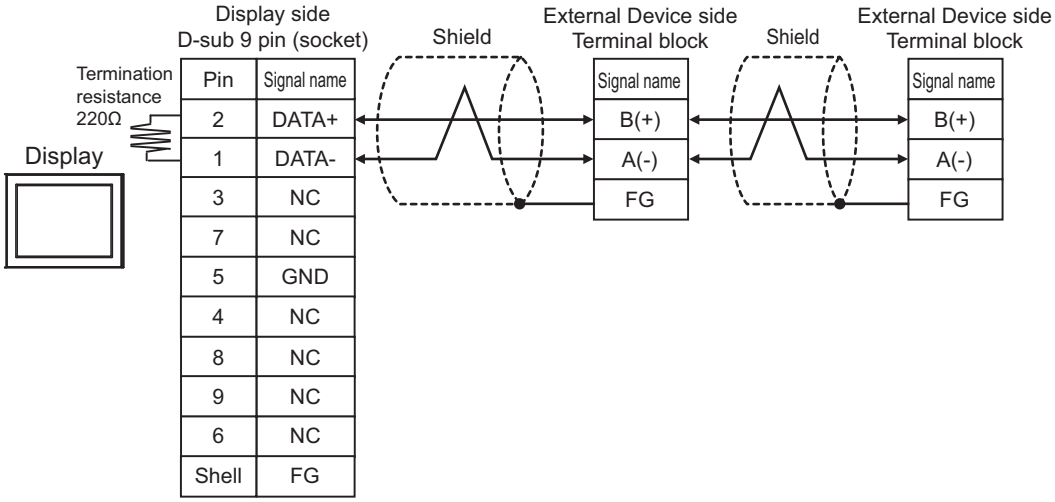

6.12 Cable Diagram 12

Display (Connection Port)	Cable		Notes
GP3000 (COM1) GP4000*1 (COM1) GP6000 (COM1) SP5000*2 (COM1/2) SP-5B00 (COM1) ST3000 (COM1) ST6000 (COM1) STM6000 (COM1) STC6000 (COM1) ET6000 (COM1) LT3000 (COM1) IPC*3 PC/AT	12A	User-created cable	The cable length must be 15m or less.
GP-4105 (COM1) GP-4115T (COM1) GP-4115T3 (COM1)	12B	User-created cable	The cable length must be 15m or less.
LT-4*01TM (COM1) LT-Rear Module (COM1)	12C	RJ45 RS-232C Cable (5m) by Pro-face PFXZLMCBRJR21	The cable length must be 5m or less.

*1 All GP4000 models except GP-4100 series and GP-4203T

*2 Except SP-5B00

*3 Only the COM port which can communicate by RS-232C can be used.
■ IPC COM Port (page 9)

12A)

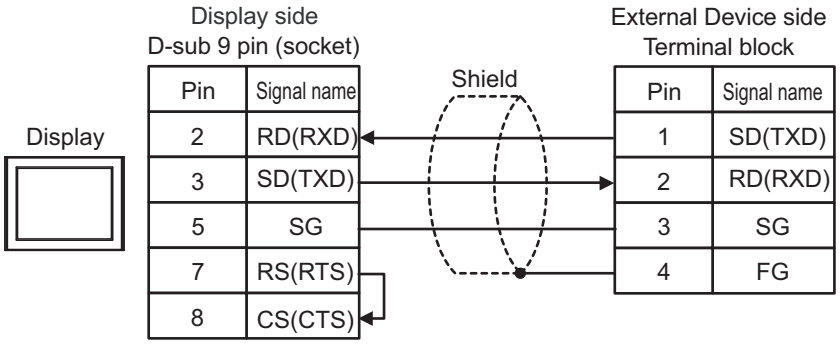

12B)

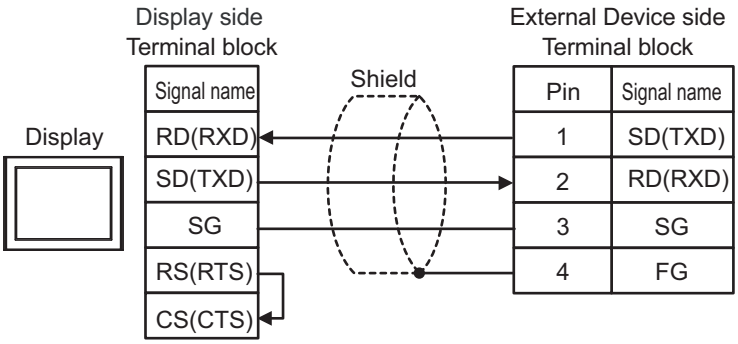

12C)

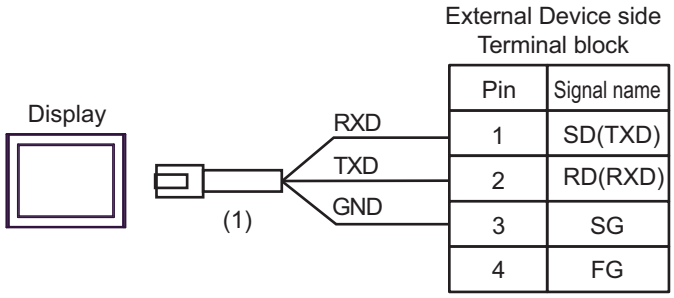

Legend	Name	Note
(1)	RJ45 RS-232C Cable (5m) by Pro-face PFXZLMCBRJR21	

6.13 Cable Diagram 13

Display (Connection Port)	Cable		Notes
GP3000 (COM1) GP4000*1 (COM1) GP6000 (COM1) SP5000*2 (COM1/2) SP-5B00 (COM1) ST3000 (COM1) ST6000 (COM1) STM6000 (COM1) STC6000 (COM1) ET6000 (COM1) LT3000 (COM1) IPC*3 PC/AT	13A	User-created cable	The cable length must be 15m or less.
GP-4105 (COM1) GP-4115T (COM1) GP-4115T3 (COM1)	13B	User-created cable	The cable length must be 15m or less.
LT-4*01TM (COM1) LT-Rear Module (COM1)	13C	RJ45 RS-232C Cable (5m) by Pro-face PFXZLMCBRJR21	The cable length must be 5m or less.

*1 All GP4000 models except GP-4100 series and GP-4203T

*2 Except SP-5B00

*3 Only the COM port which can communicate by RS-232C can be used.
■ IPC COM Port (page 9)

13A)

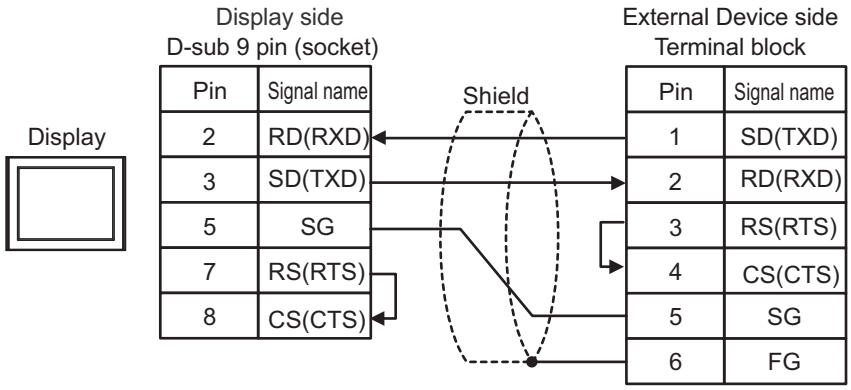

13B)

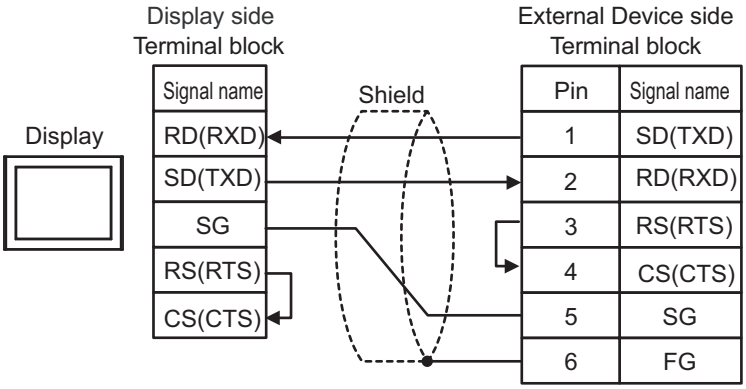

13C)

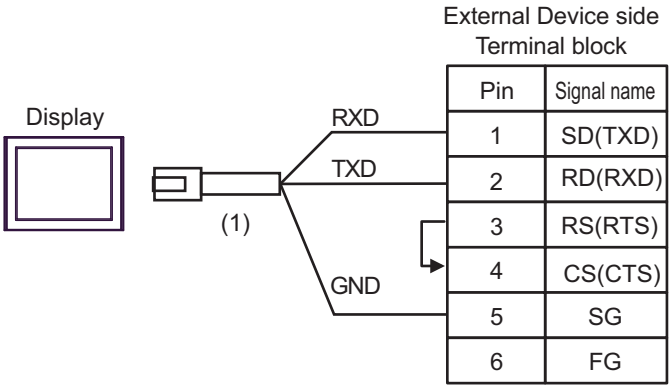

Legend	Name	Note
(1)	RJ45 RS-232C Cable (5m) by Pro-face PFXZLMCBRJR21	

6.14 Cable Diagram 14

Display (Connection Port)	Cable		Notes
GP3000 (COM1) GP4000*1 (COM1) GP6000 (COM1) SP5000 (COM1/2)*2 (COM1/2) SP-5B00 (COM1) ST3000 (COM1) ST6000 (COM1) STM6000 (COM1) STC6000 (COM1) ET6000 (COM1) LT3000 (COM1) IPC*3 PC/AT	14A	User-created cable	The cable length must be 3m or less.
GP-4105 (COM1) GP-4115T (COM1) GP-4115T3 (COM1)	14B	User-created cable	The cable length must be 3m or less.
LT-4*01TM (COM1) LT-Rear Module (COM1)	14C	RJ45 RS-232C Cable (5m) by Pro-face PFXZLMCBRJR21	The cable length must be 3m or less.

*1 All GP4000 models except GP-4100 Series and GP-4203T

*2 Except SP-5B00

*3 Only the COM port which can communicate by RS-232C can be used.
☞ ■ IPC COM Port (page 9)

14A)

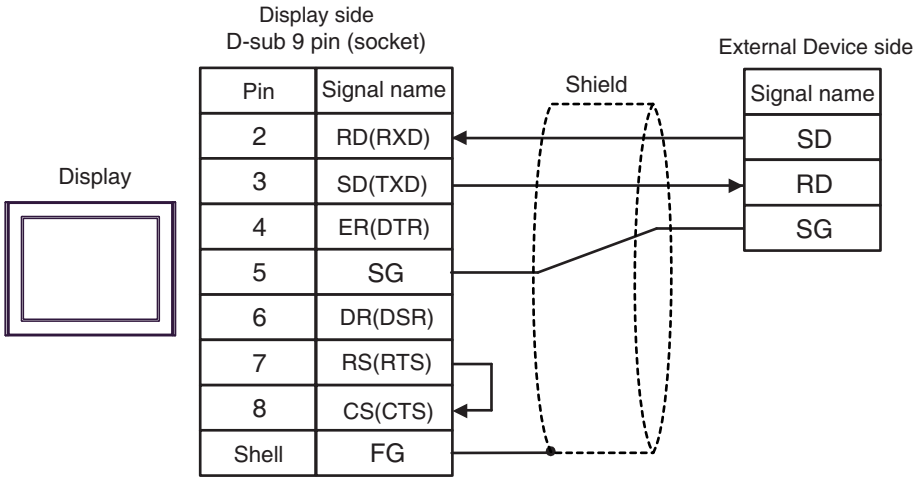

14B)

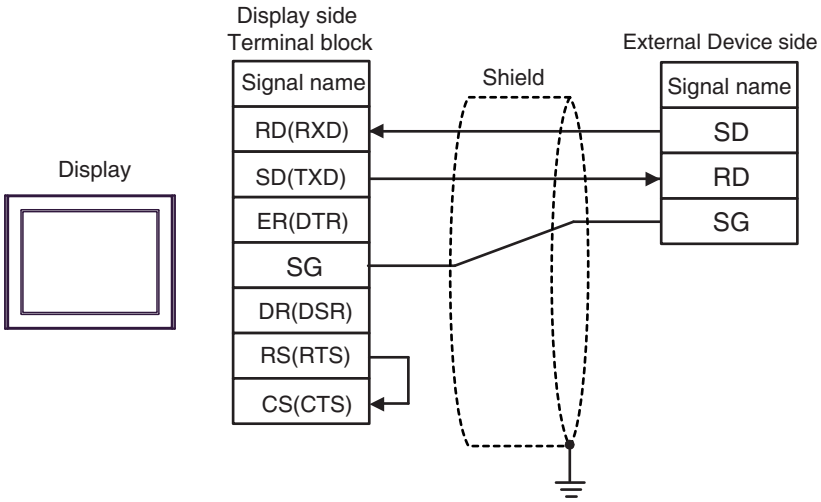

14C)

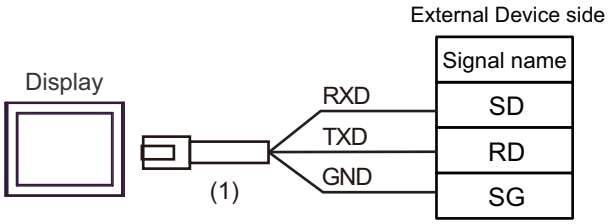

Number	Name	Notes
(1)	RJ45 RS-232C Cable (5m) by Pro-face PFXZLMCBRJR21	

6.15 Cable Diagram 15

Display (Connection Port)	Cable		Notes
GP3000 (COM1) GP4000*1 (COM1) GP6000 (COM1) SP5000 (COM1/2)*2 (COM1/2) SP-5B00 (COM1) ST3000 (COM1) ST6000 (COM1) STM6000 (COM1) STC6000 (COM1) ET6000 (COM1) LT3000 (COM1) IPC*3 PC/AT	15A	User-created cable	The cable length must be 15m or less.
GP-4105 (COM1) GP-4115T (COM1) GP-4115T3 (COM1)	15B	User-created cable	The cable length must be 15m or less.

*1 All GP4000 models except GP-4100 Series and GP-4203T

*2 Except SP-5B00

*3 Only the COM port which can communicate by RS-232C can be used.
☞ ■ IPC COM Port (page 9)

15A)

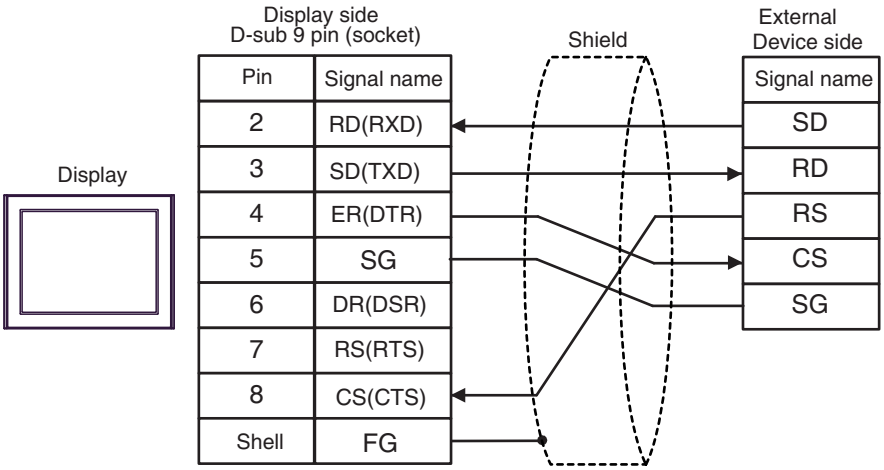

15B)

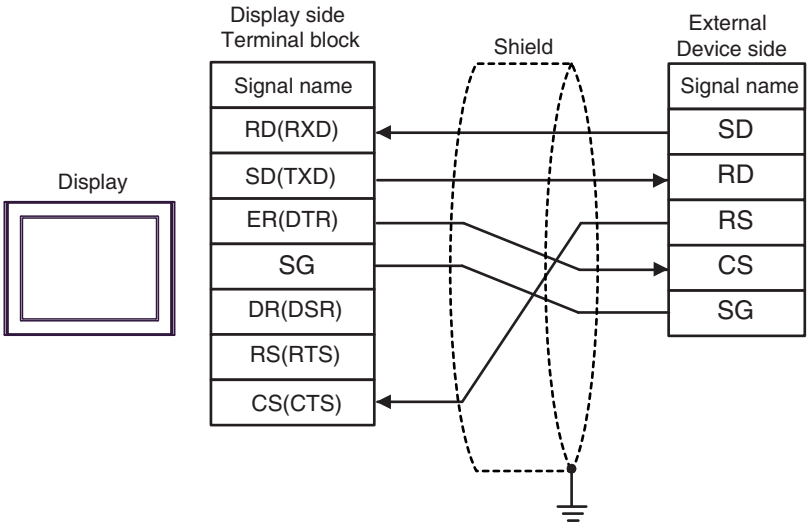
Display side
Terminal block
Shield
External
Device side
Signal name
RD(RXD)
SD(TXD)
ER(DTR)
SG
DR(DSR)
RS(RTS)
CS(CTS)
Signal name
SD
RD
RS
CS
SG
Display

6.16 Cable Diagram 16

Display (Connection Port)	Cable		Notes
GP3000 (COM1) GP4000*1 (COM1) GP6000 (COM1) SP5000 (COM1/2)*2 (COM1/2) SP-5B00 (COM1) ST3000 (COM1) ST6000 (COM1) STM6000 (COM1) STC6000 (COM1) ET6000 (COM1) LT3000 (COM1) IPC*3 PC/AT	16A	User-created cable (When using the COM.1 port)	The cable length must be 15m or less.
	16B	User-created cable (When using the COM.2 port)	
GP-4105 (COM1) GP-4115T (COM1) GP-4115T3 (COM1)	16C	User-created cable (When using the COM.1 port)	The cable length must be 15m or less.
	16D	User-created cable (When using the COM.2 port)	
LT-4*01TM (COM1) LT-Rear Module (COM1)	16E	RJ45 RS-232C Cable (5m) by Pro-face PFXZLMCBRJR21 (When using the COM.1 port)	The cable length must be 5m or less.
	16F	RJ45 RS-232C Cable (5m) by Pro-face PFXZLMCBRJR21 (When using the COM.2 port)	

*1 All GP4000 models except GP-4100 Series and GP-4203T

*2 Except SP-5B00

*3 Only the COM port which can communicate by RS-232C can be used.
☞ ■ IPC COM Port (page 9)

16A)

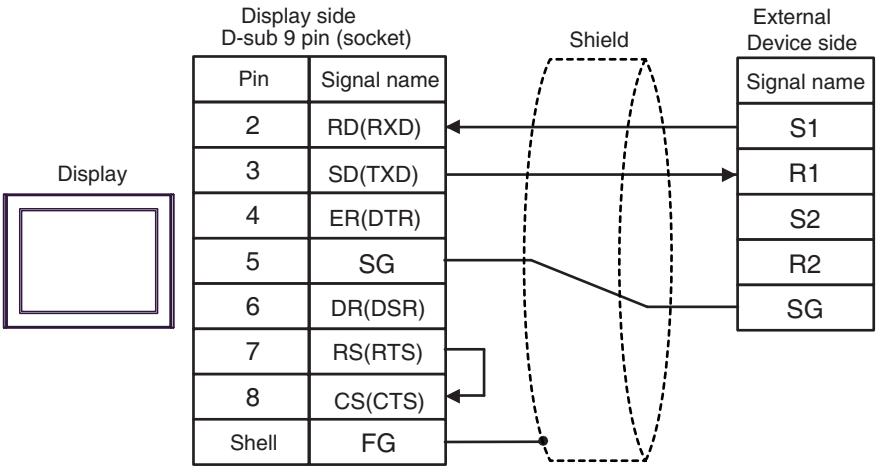

16B)

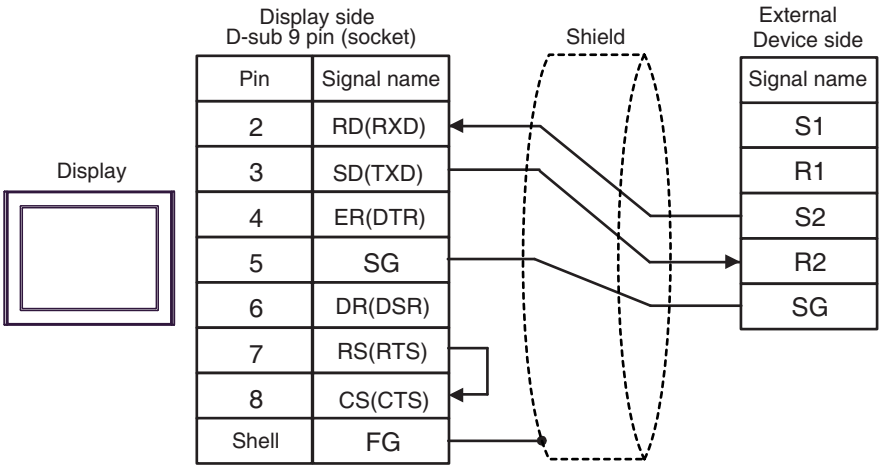
Display side
D-sub 9 pin (socket)
Shield
External
Device side
Pin
Signal name
2
RD(RXD)
3
SD(TXD)
4
ER(DTR)
5
SG
6
DR(DSR)
7
RS(RTS)
8
CS(CTS)
Shell
FG
Display
Signal name
S1
R1
S2
R2
SG

16C)

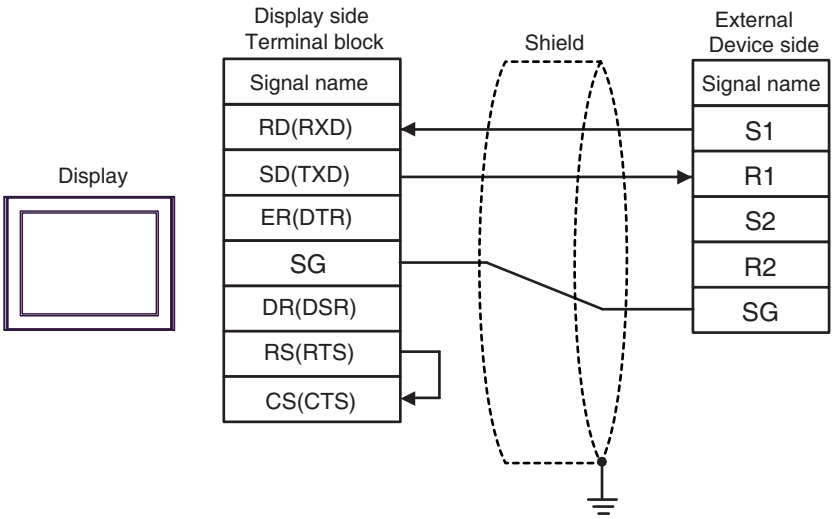
Display side
Terminal block
Shield
External
Device side
Signal name
RD(RXD)
SD(TXD)
ER(DTR)
SG
DR(DSR)
RS(RTS)
CS(CTS)
Display
Signal name
S1
R1
S2
R2
SG

16D)

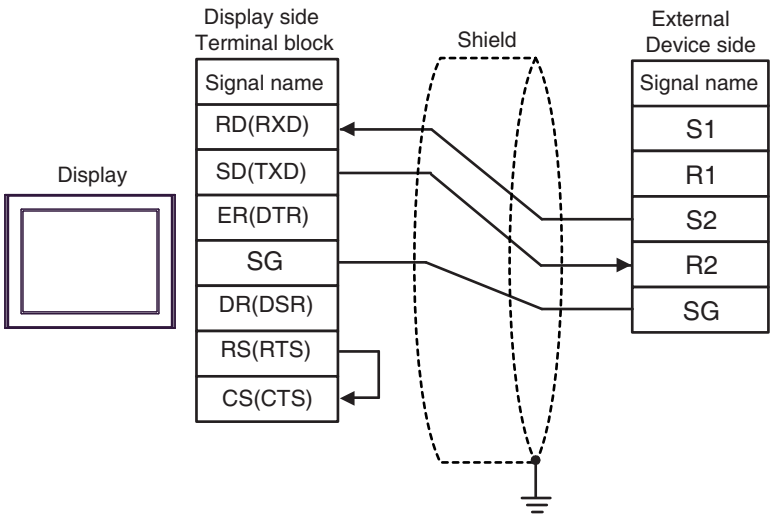
Display side
Terminal block
Shield
External
Device side
Signal name
RD(RXD)
SD(TXD)
ER(DTR)
SG
DR(DSR)
RS(RTS)
CS(CTS)
Display
Signal name
S1
R1
S2
R2
SG

16E)

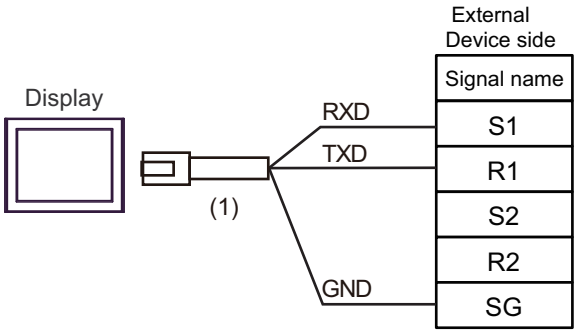

Number	Name	Notes
(1)	RJ45 RS-232C Cable (5m) by Pro-face PFXZLMCBRJR21	

16F)

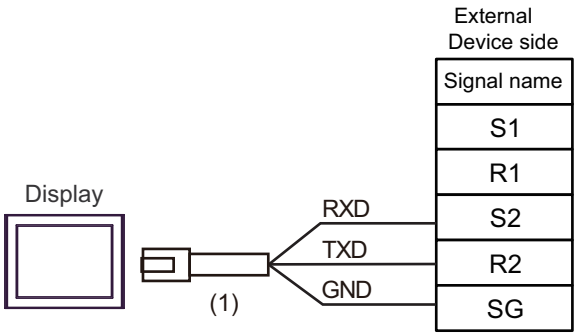

Number	Name	Notes
(1)	RJ45 RS-232C Cable (5m) by Pro-face PFXZLMCBRJR21	

6.17 Cable Diagram 17

Display (Connection Port)	Cable		Notes
GP3000 (COM1) GP4000*1 (COM1) GP6000 (COM1) SP5000 (COM1/2)*2 (COM1/2) SP-5B00 (COM1) ST3000 (COM1) ST6000 (COM1) STM6000 (COM1) STC6000 (COM1) ET6000 (COM1) LT3000 (COM1) IPC*3 PC/AT	17A	User-created cable	The cable length must be 15m or less.
GP-4105 (COM1) GP-4115T (COM1) GP-4115T3 (COM1)	17B	User-created cable	The cable length must be 15m or less.
LT-4*01TM (COM1) LT-Rear Module (COM1)	17C	RJ45 RS-232C Cable (5m) by Pro-face PFXZLMCBRJR21	The cable length must be 5m or less.

*1 All GP4000 models except GP-4100 Series and GP-4203T

*2 Except SP-5B00

*3 Only the COM port which can communicate by RS-232C can be used.
☞ ■ IPC COM Port (page 9)

17A)

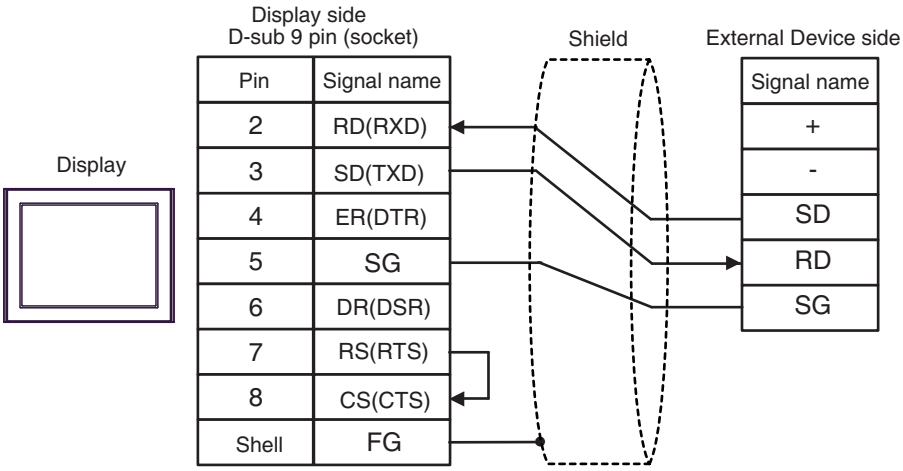

17B)

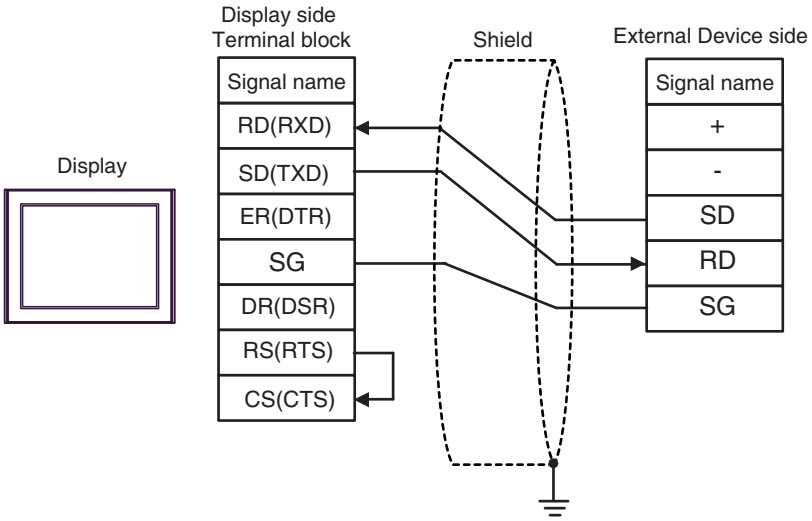

17C)

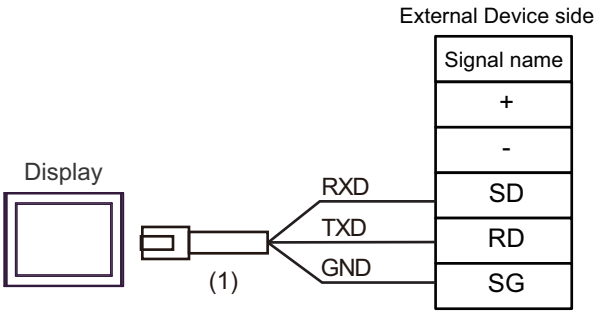

Number	Name	Notes
(1)	RJ45 RS-232C Cable (5m) by Pro-face PFXZLMCBRJR21	

6.18 Cable Diagram 18

Display (Connection Port)	Cable		Notes
GP3000*1 (COM1) AGP-3302B (COM2) GP-4*01TM (COM1) GP-Rear Module (COM1) ST3000*2 (COM2) LT3000 (COM1)	18A	COM port conversion adapter by Pro-face CA3-ADPCOM-01 + Terminal block conversion adapter by Pro-face CA3-ADPTRM-01 + User-created cable	The cable length must be 1200m or less.
	18B	User-created cable	
GP3000*3 (COM2)	18C	Online adapter by Pro-face CA4-ADPONL-01 + Terminal block conversion adapter by Pro-face CA3-ADPTRM-01 + User-created cable	The cable length must be 1200m or less.
	18D	Online adapter by Pro-face CA4-ADPONL-01 + User-created cable	
IPC*4	18E	COM port conversion adapter by Pro-face CA3-ADPCOM-01 + Terminal block conversion adapter by Pro-face CA3-ADPTRM-01 + User-created cable	The cable length must be 1200m or less.
	18F	User-created cable	
GP-4106 (COM1) GP-4116T (COM1)	18G	User-created cable	The cable length must be 1200m or less.
GP-4107 (COM1) GP-4*03T*5 (COM2) GP-4203T (COM1)	18H	User-created cable	The cable length must be 1200m or less.
GP4000*6 (COM2) GP-4201T (COM1) GP6000 (COM2) SP5000 (COM1/2)*7 (COM1/2) SP-5B00 (COM2) ST6000*8 (COM2) ST-6200 (COM1) STM6000 (COM1) STC6000 (COM1) ET6000*9 (COM2) PS6000 (Basic Box) (COM1/2)	18I	RS-422 terminal block conversion adapter by Pro-face PFXZCBADTM1*10 + User-created cable	The cable length must be 1200m or less.
	18B	User-created cable	
LT-4*01TM (COM1) LT-Rear Module (COM1)	18J	RJ45 RS-485 Cable (5m) by Pro-face PFXZLMCBRJR81	The cable length must be 200m or less.

Display (Connection Port)	Cable		Notes
PE-4000B*11 PS5000*11 PS6000 (Optional Interface)*11	18K	User-created cable	The cable length must be 1200m or less.

*1 All GP3000 models except AGP-3302B

*2 Except AST-3211A and AST-3302B

*3 All GP3000 models except GP-3200 series and AGP-3302B

*4 Only the COM port which can communicate by RS-422/485 (2 wire) can be used. (Except PE-4000B, PS5000, and PS6000)
☞ ■ IPC COM Port (page 9)

*5 Except GP-4203T

*6 All GP4000 models except GP-4100 series, GP-4*01TM, GP-Rear Module, GP-4201T and GP-4*03T

*7 Except SP-5B00

*8 Except ST-6200

*9 Due to the COM port specifications, flow control is not possible. Omit wiring the control pins on the Display side of the cable diagram.

*10 When using a Terminal Block Conversion Adapter (CA3-ADPTRM-01) instead of the RS-422 Terminal Block Conversion Adapter, refer to Cable Diagram 18A.

*11 Only the COM port which can communicate by RS-422/485 (2 wire) can be used.
☞ ■ IPC COM Port (page 9)

18A)

- 1:1 Connection

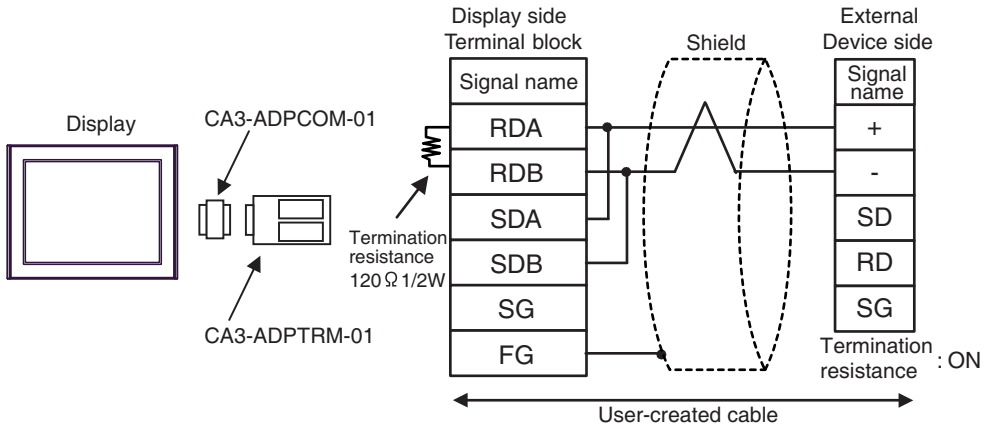

NOTE
- Use the DIP switch in the communication cassette to set the termination resistance. Set SW1-1 of the External Device to ON.

- 1:n Connection

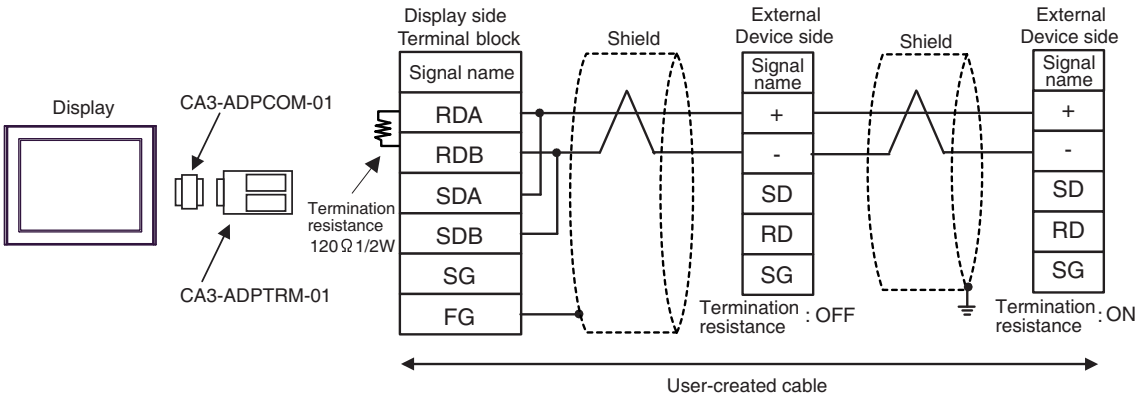

NOTE
- Use the DIP switch in the communication cassette to set the termination resistance. Set SW1-1 of the External Device which terminates the connection to ON.

18B)

- 1:1 Connection

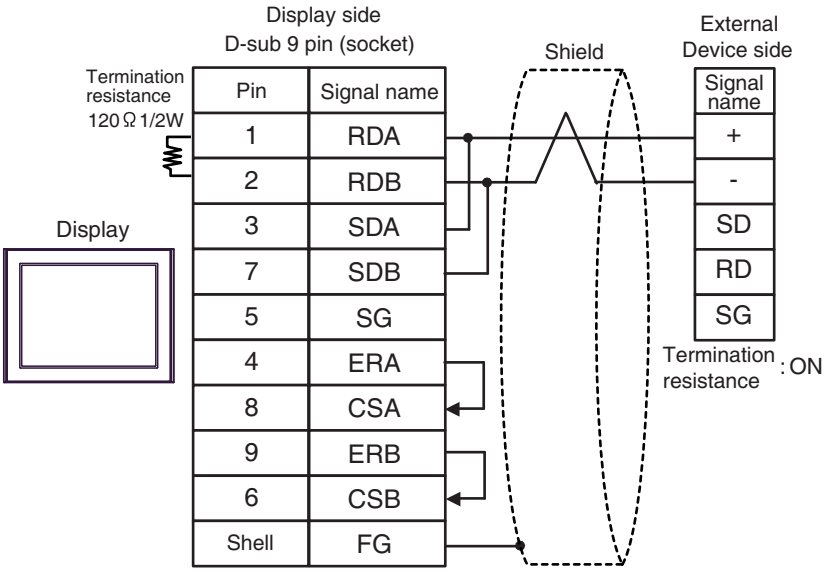

NOTE
- Use the DIP switch in the communication cassette to set the termination resistance. Set SW1-1 of the External Device to ON.

- 1:n Connection

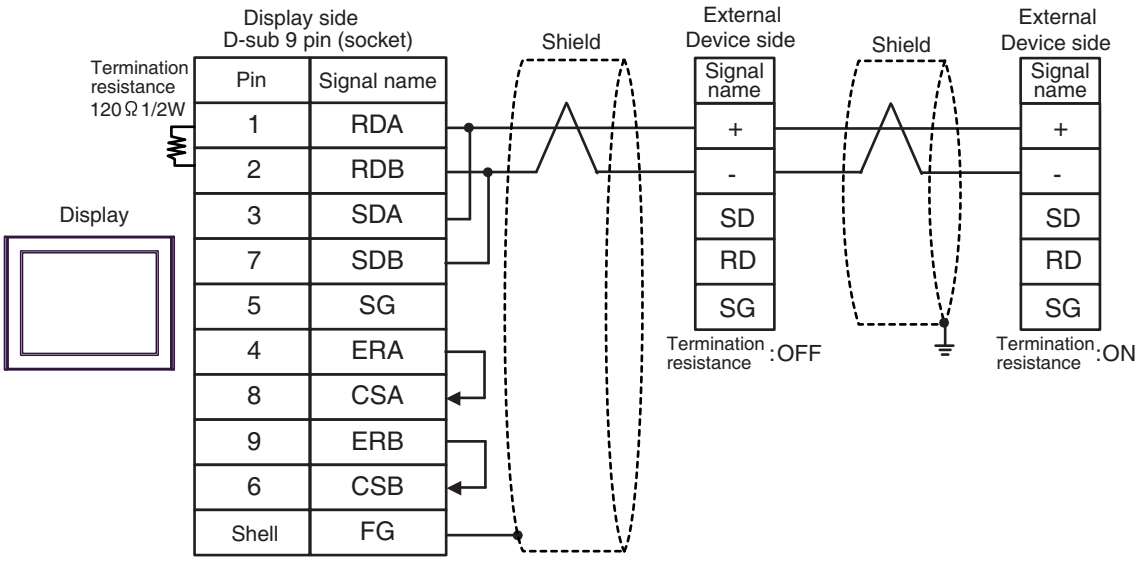

NOTE
- Use the DIP switch in the communication cassette to set the termination resistance. Set SW1-1 of the External Device which terminates the connection to ON.

18C)

- 1:1 Connection

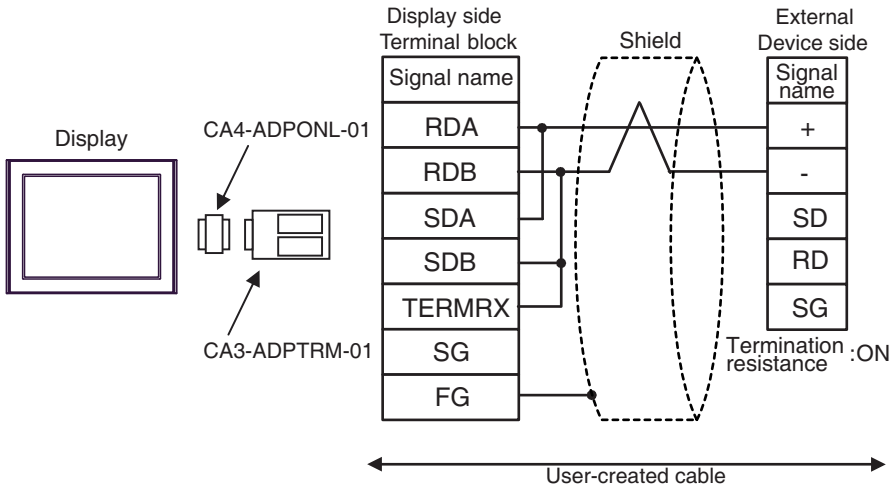

NOTE

- Use the DIP switch in the communication cassette to set the termination resistance. Set SW1-1 of the External Device to ON.

- 1:n Connection

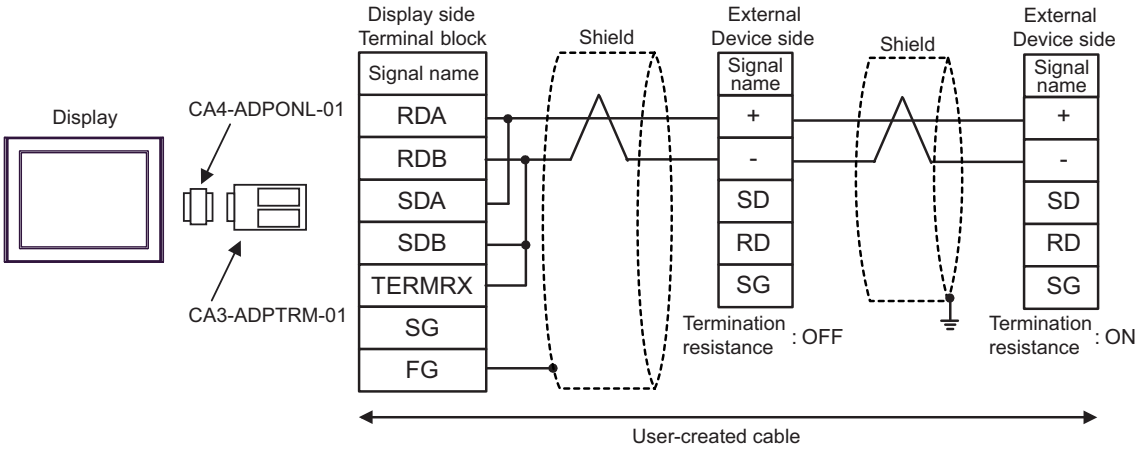

NOTE

- Use the DIP switch in the communication cassette to set the termination resistance. Set SW1-1 of the External Device which terminates the connection to ON.

18D)

- 1:1 Connection

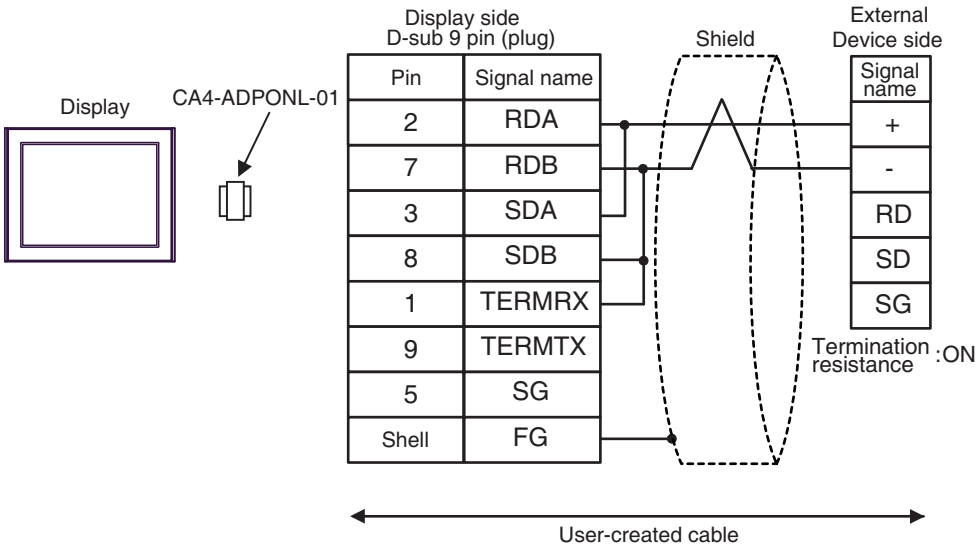

NOTE

- Use the DIP switch in the communication cassette to set the termination resistance. Set SW1-1 of the External Device to ON.

- 1:n Connection

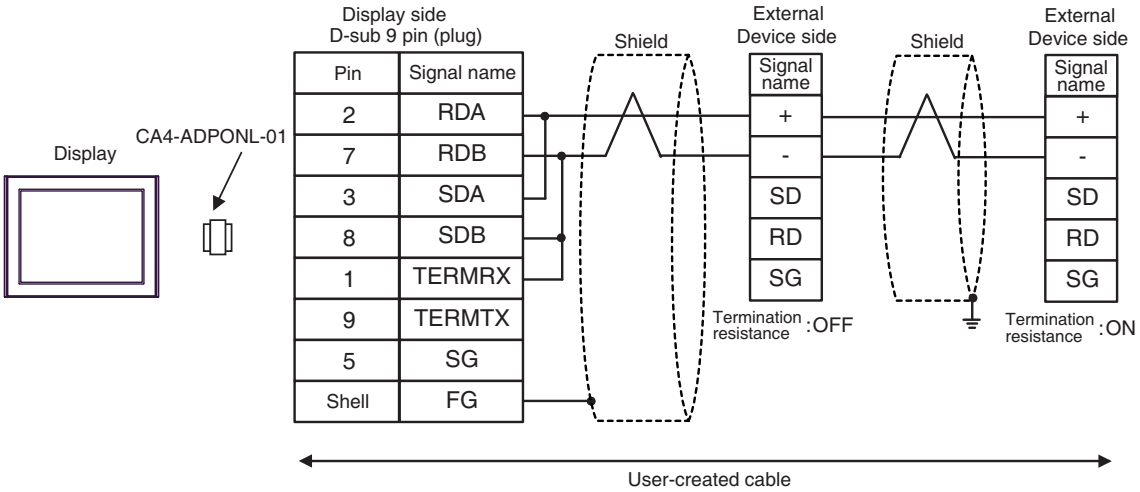

NOTE

- Use the DIP switch in the communication cassette to set the termination resistance. Set SW1-1 of the External Device which terminates the connection to ON.

18E)

- 1:1 Connection

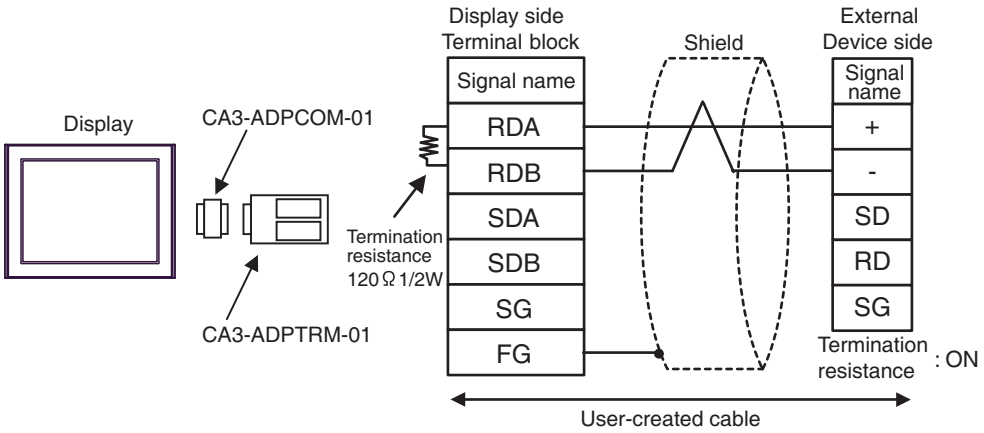

NOTE

- Use the DIP switch in the communication cassette to set the termination resistance. Set SW1-1 of the External Device to ON.

- 1:n Connection

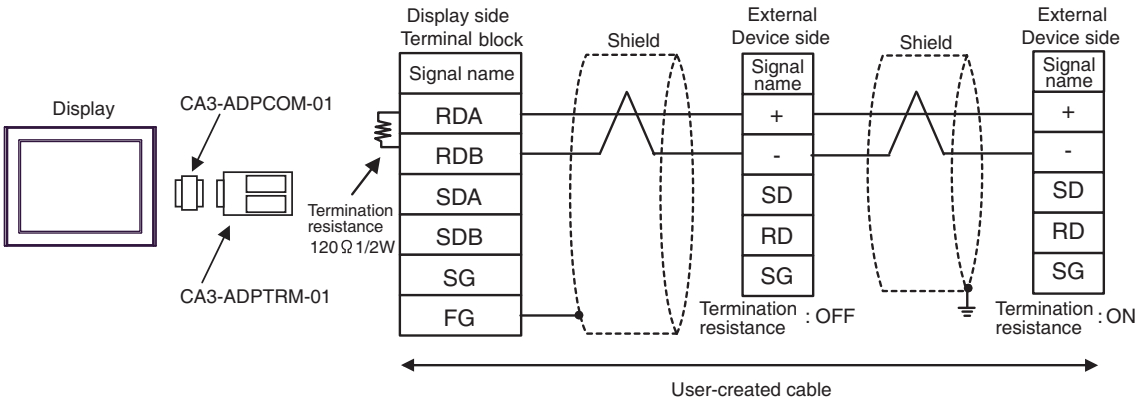

NOTE

- Use the DIP switch in the communication cassette to set the termination resistance. Set SW1-1 of the External Device which terminates the connection to ON.

18F)

- 1:1 Connection

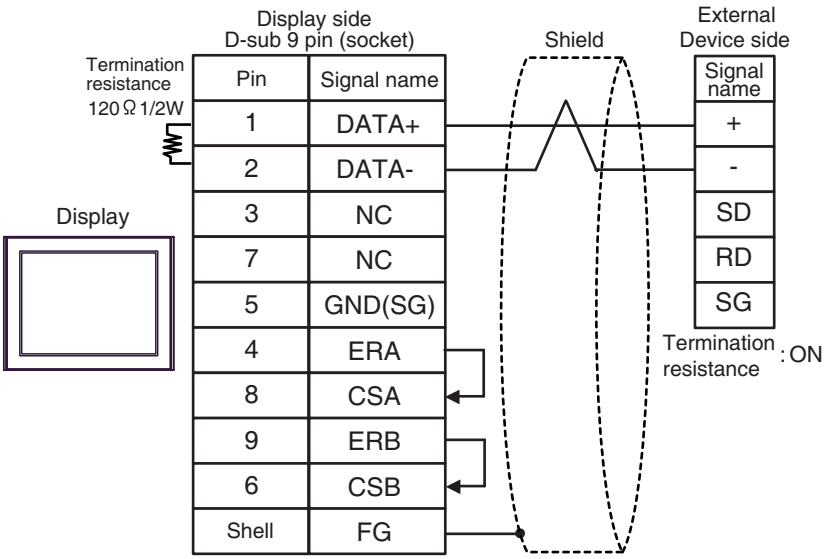

NOTE

- Use the DIP switch in the communication cassette to set the termination resistance. Set SW1-1 of the External Device to ON.

- 1:n Connection

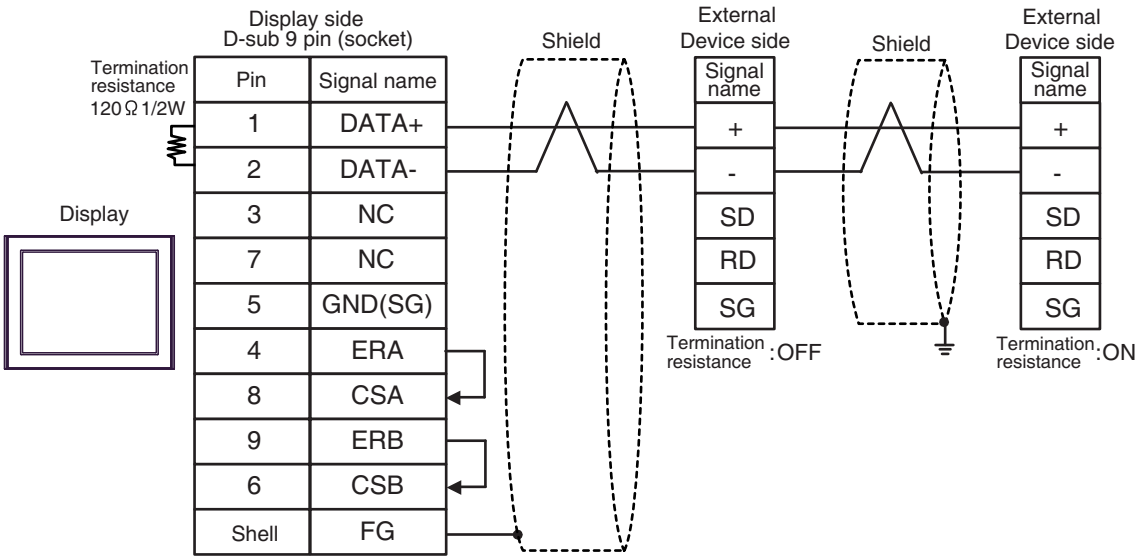

NOTE

- Use the DIP switch in the communication cassette to set the termination resistance. Set SW1-1 of the External Device which terminates the connection to ON.

18G)

- 1:1 Connection

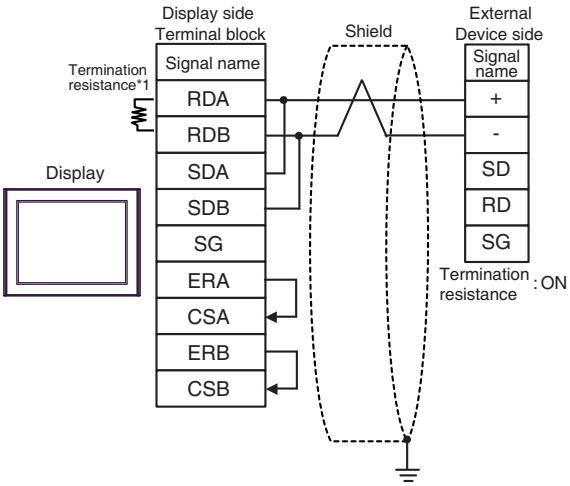

NOTE

- Use the DIP switch in the communication cassette to set the termination resistance. Set SW1-1 of the External Device to ON.

- 1:n Connection

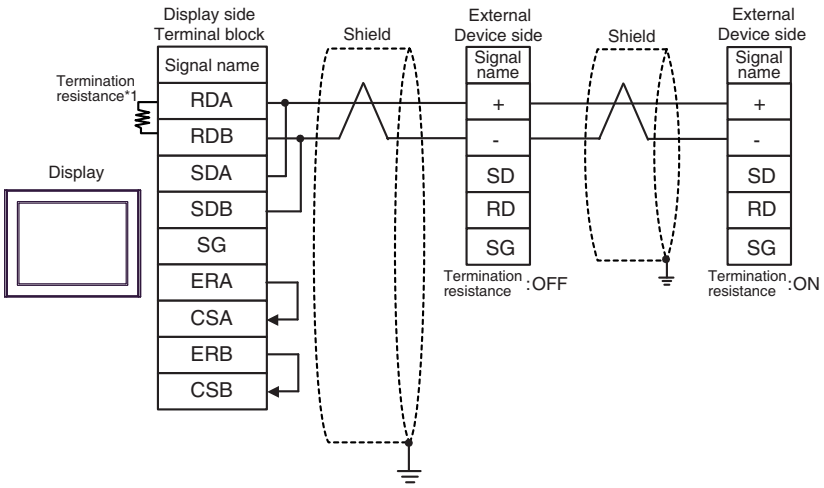

NOTE

- Use the DIP switch in the communication cassette to set the termination resistance. Set SW1-1 of the External Device which terminates the connection to ON.

*1 The resistance in the Display is used as the termination resistance. Set the value of the DIP Switch on the rear of the Display as shown in the table below.

DIP Switch No.	Set Value
1	OFF
2	OFF
3	ON
4	ON

18H)

- 1:1 Connection

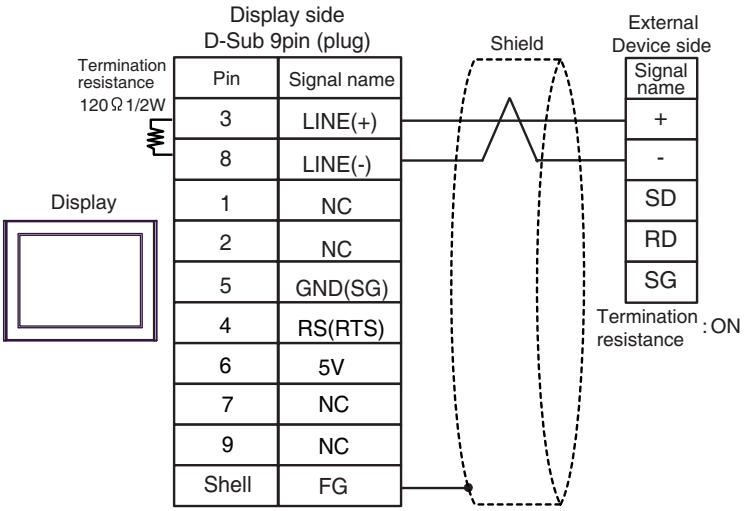

IMPORTANT

- The 5V output (Pin #6) on the Display is the power for the Siemens AG's PROFIBUS connector. Do not use it for other devices.

NOTE

- Use the DIP switch in the communication cassette to set the termination resistance. Set SW1-1 of the External Device to ON.
- In COM on the GP-4107, the SG and FG terminals are isolated.

- 1:n Connection

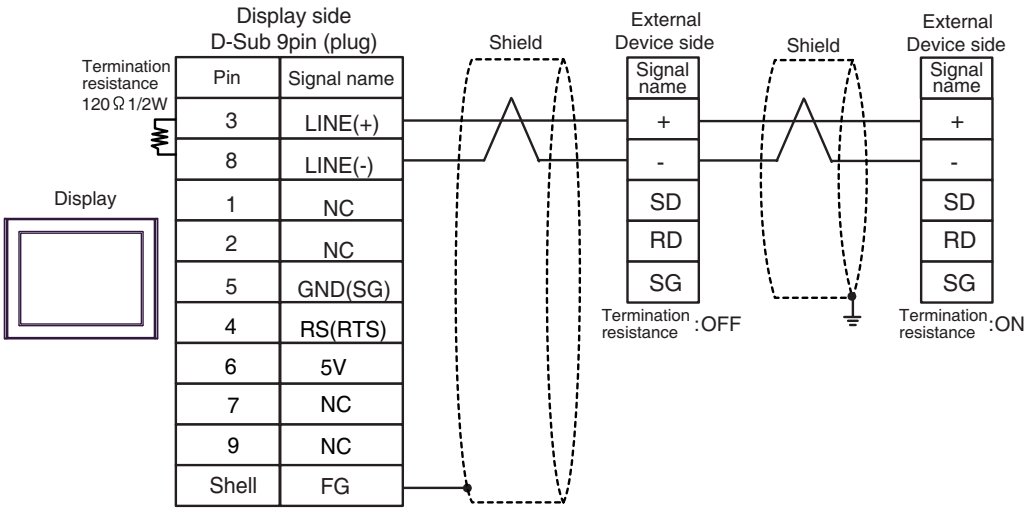

IMPORTANT

- The 5V output (Pin #6) on the Display is the power for the Siemens AG's PROFIBUS connector. Do not use it for other devices.

NOTE

- Use the DIP switch in the communication cassette to set the termination resistance. Set SW1-1 of the External Device which terminates the connection to ON.
- In COM on the GP-4107, the SG and FG terminals are isolated.

18I)

- 1:1 Connection

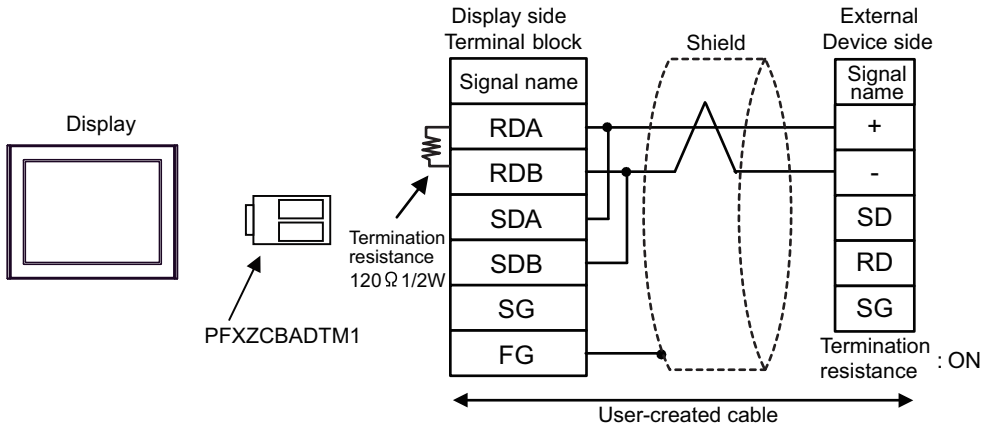

NOTE
- Use the DIP switch in the communication cassette to set the termination resistance. Set SW1-1 of the External Device to ON.

- 1:n Connection

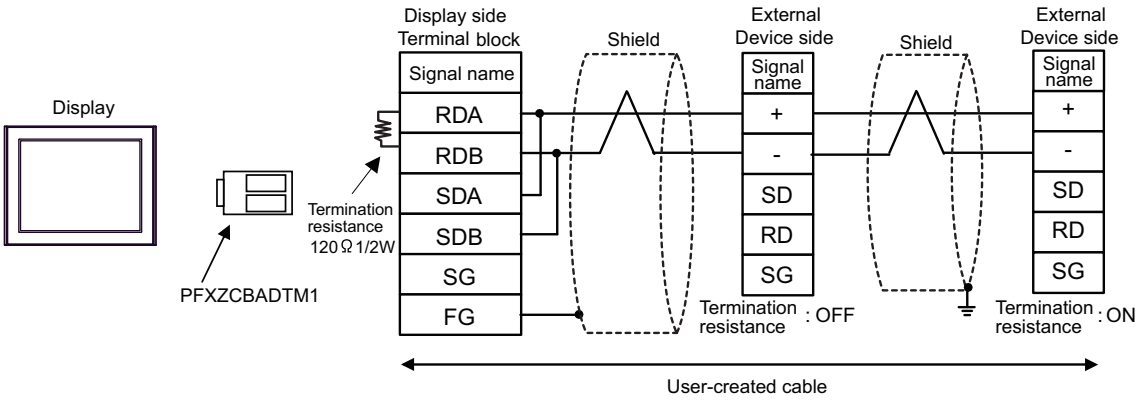

NOTE
- Use the DIP switch in the communication cassette to set the termination resistance. Set SW1-1 of the External Device which terminates the connection to ON.

18J)

- 1:1 Connection

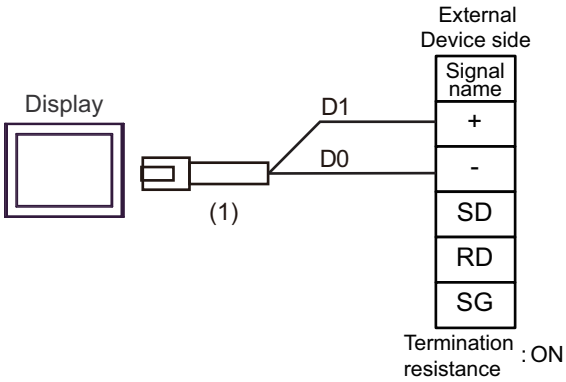

NOTE

- Use the DIP switch in the communication cassette to set the termination resistance. Set SW1-1 of the External Device to ON.

- 1:n Connection

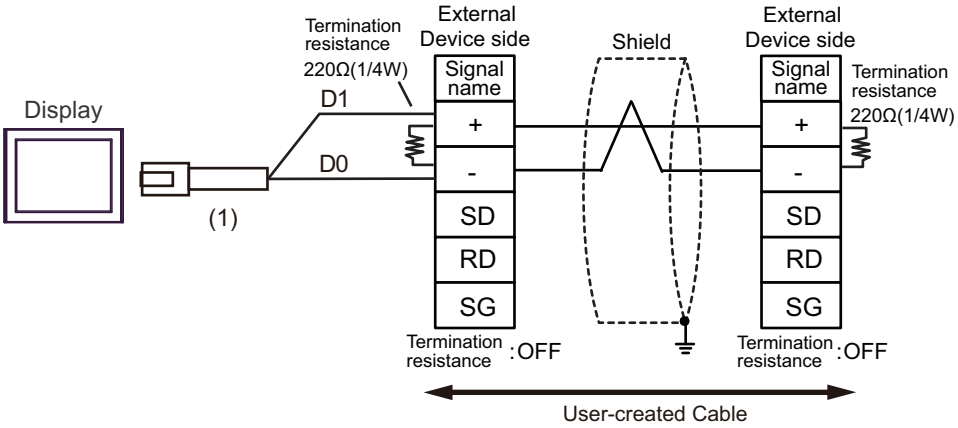

Number	Name	Notes
(1)	RJ45 RS-485 Cable (5m) by Pro-face PFXZLMCBRJR81	

18K)

- 1:1 Connection

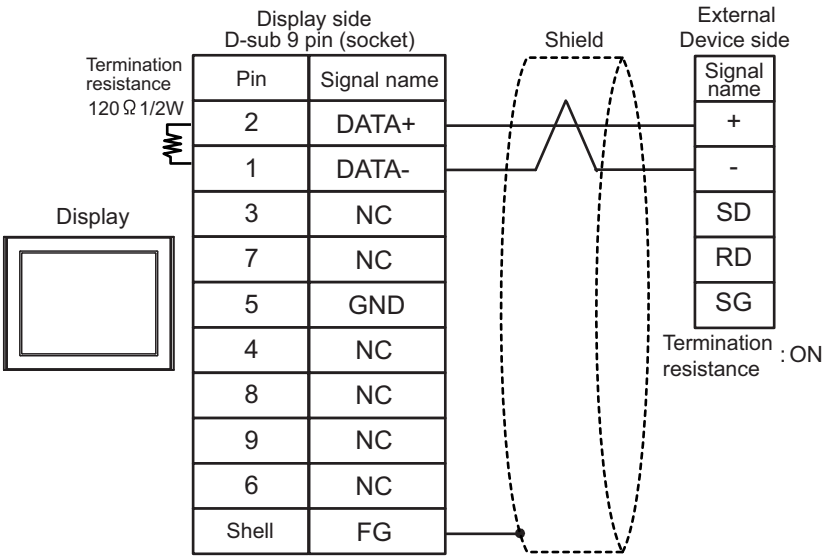

NOTE

- Use the DIP switch in the communication cassette to set the termination resistance. Set SW1-1 of the External Device to ON.

- 1:n Connection

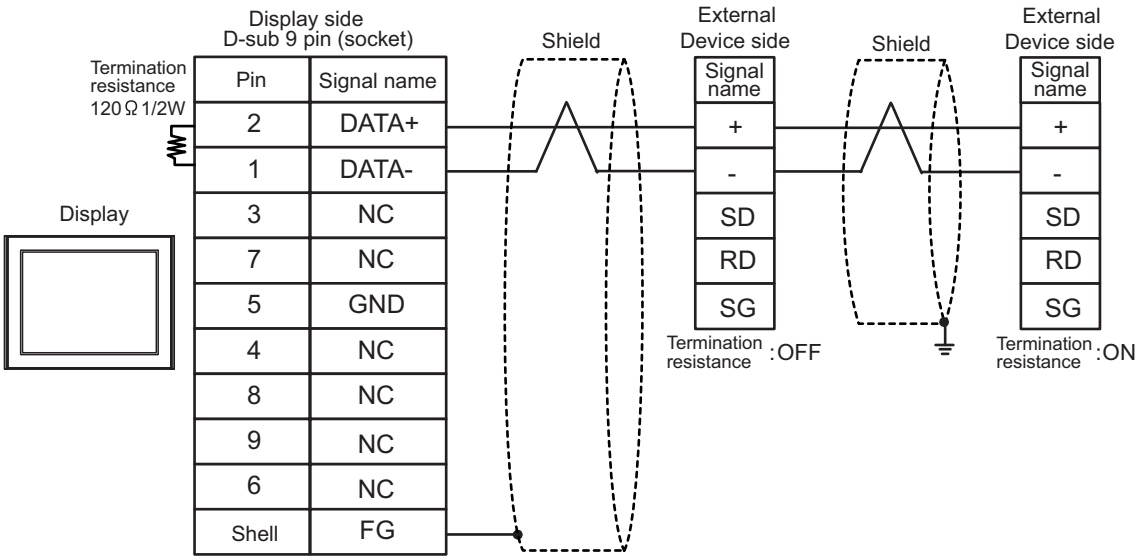

NOTE

- Use the DIP switch in the communication cassette to set the termination resistance. Set SW1-1 of the External Device which terminates the connection to ON.

6.19 Cable Diagram 19

Display (Connection Port)	Cable		Notes
GP3000[*1] (COM1) AGP-3302B (COM2) GP-4*01TM (COM1) GP-Rear Module (COM1) ST3000[*2] (COM2) LT3000 (COM1)	19A	COM port conversion adapter by Pro-face CA3-ADPCOM-01 + Terminal block conversion adapter by Pro-face CA3-ADPTRM-01 + User-created cable	The cable length must be 1200m or less.
	19B	User-created cable	
GP3000[*3] (COM2)	19C	Online adapter by Pro-face CA4-ADPONL-01 + Terminal block conversion adapter by Pro-face CA3-ADPTRM-01 + User-created cable	The cable length must be 1200m or less.
	19D	Online adapter by Pro-face CA4-ADPONL-01 + User-created cable	
IPC[*4]	19E	COM port conversion adapter by Pro-face CA3-ADPCOM-01 + Terminal block conversion adapter by Pro-face CA3-ADPTRM-01 + User-created cable	The cable length must be 1200m or less.
	19F	User-created cable	
GP-4106 (COM1) GP-4116T (COM1)	19G	User-created cable	The cable length must be 1200m or less.
GP-4107 (COM1) GP-4*03T[*5] (COM2) GP-4203T (COM1)	19H	User-created cable	The cable length must be 1200m or less.
GP4000[*6] (COM2) GP-4201T (COM1) GP6000 (COM2) SP5000 (COM1/2)[*7] (COM1/2) SP-5B00 (COM2) ST6000[*8] (COM2) ST-6200 (COM1) STM6000 (COM1) STC6000 (COM1) ET6000[*9] (COM2) PS6000 (Basic Box) (COM1/2)	19I	RS-422 terminal block conversion adapter by Pro-face PFXZCBADTM1[*10] + User-created cable	The cable length must be 1200m or less.
	19B	User-created cable	
LT-4*01TM (COM1) LT-Rear Module (COM1)	19J	RJ45 RS-485 Cable (5m) by Pro-face PFXZLMCBRJR81	The cable length must be 200m or less.

Display (Connection Port)	Cable		Notes
PE-4000B*11 PS5000*11 PS6000 (Optional Interface)*11	19K	User-created cable	The cable length must be 1200m or less.

*1 All GP3000 models except AGP-3302B

*2 Except AST-3211A and AST-3302B

*3 All GP3000 models except GP-3200 series and AGP-3302B

*4 Only the COM port which can communicate by RS-422/485 (2 wire) can be used. (Except PE-4000B, PS5000, and PS6000)
☞ ■ IPC COM Port (page 9)

*5 Except GP-4203T

*6 All GP4000 models except GP-4100 series, GP-4*01TM, GP-Rear Module, GP-4201T and GP-4*03T

*7 Except SP-5B00

*8 Except ST-6200

*9 Due to the COM port specifications, flow control is not possible. Omit wiring the control pins on the Display side of the cable diagram.

*10 When using a Terminal Block Conversion Adapter (CA3-ADPTRM-01) instead of the RS-422 Terminal Block Conversion Adapter, refer to Cable Diagram 19A.

*11 Only the COM port which can communicate by RS-422/485 (2 wire) can be used.
☞ ■ IPC COM Port (page 9)

19A)

- 1:1 Connection

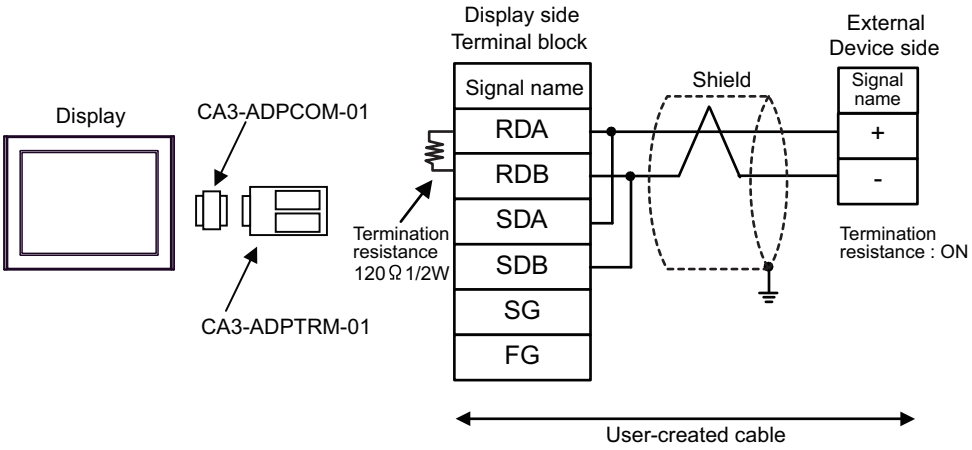

- 1:n Connection

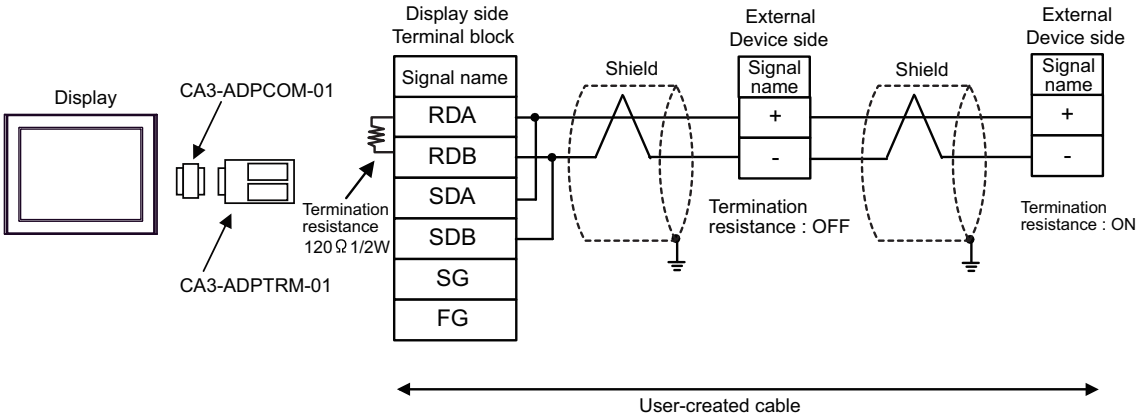

NOTE

- Set the termination resistance selector switch of the External Device which terminates the connection to ON.

19B)

- 1:1 Connection

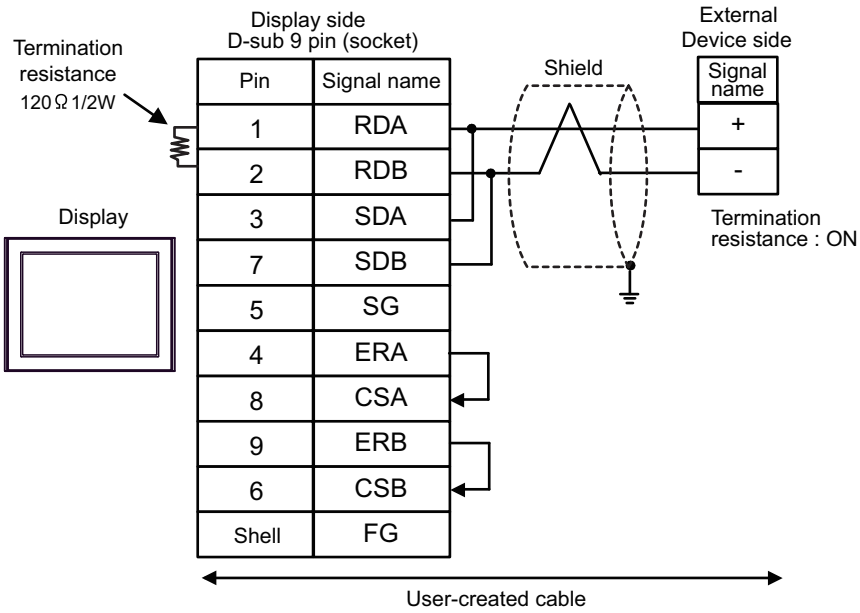

- 1:n Connection

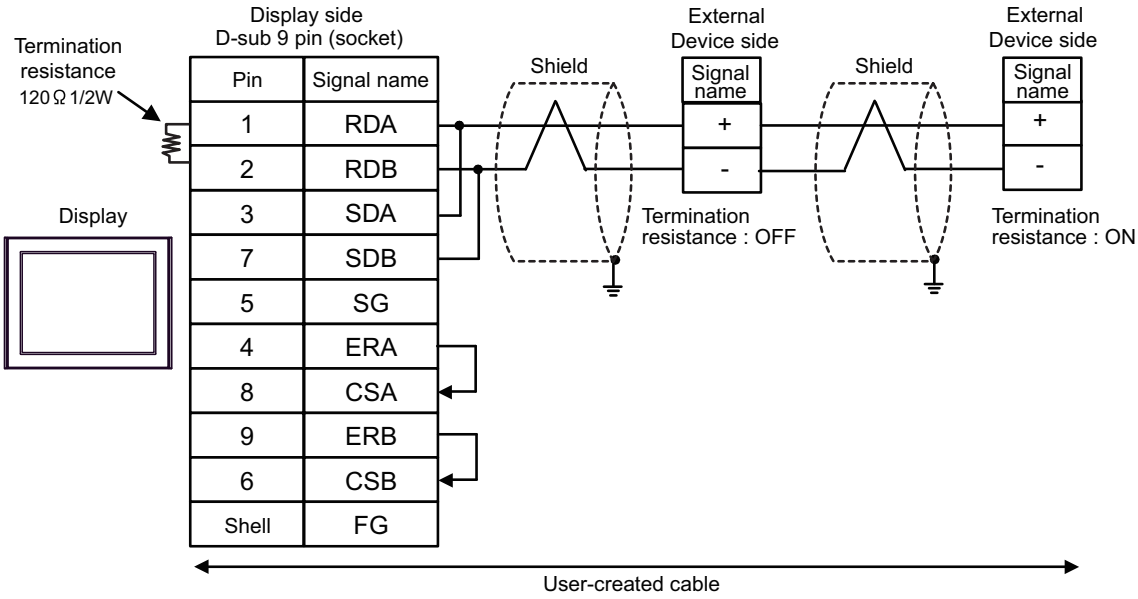

NOTE

- Set the termination resistance selector switch of the External Device which terminates the connection to ON.

19C)

- 1:1 Connection

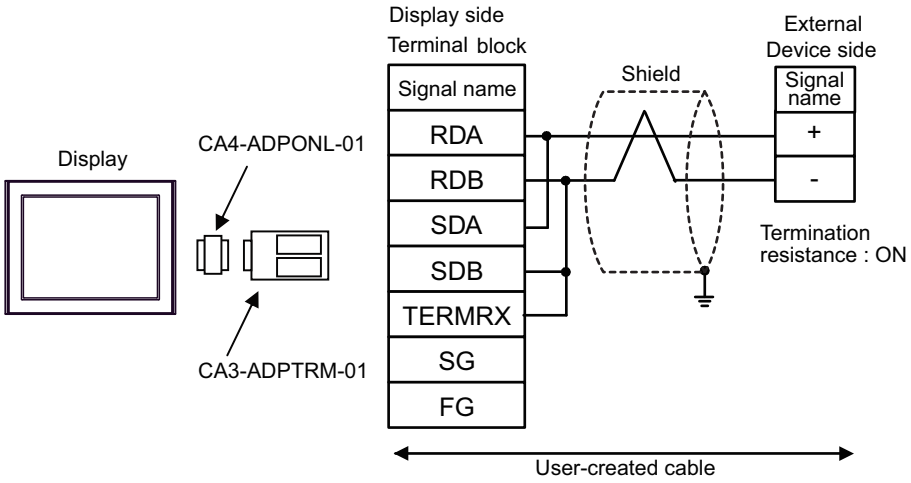

- 1:n Connection

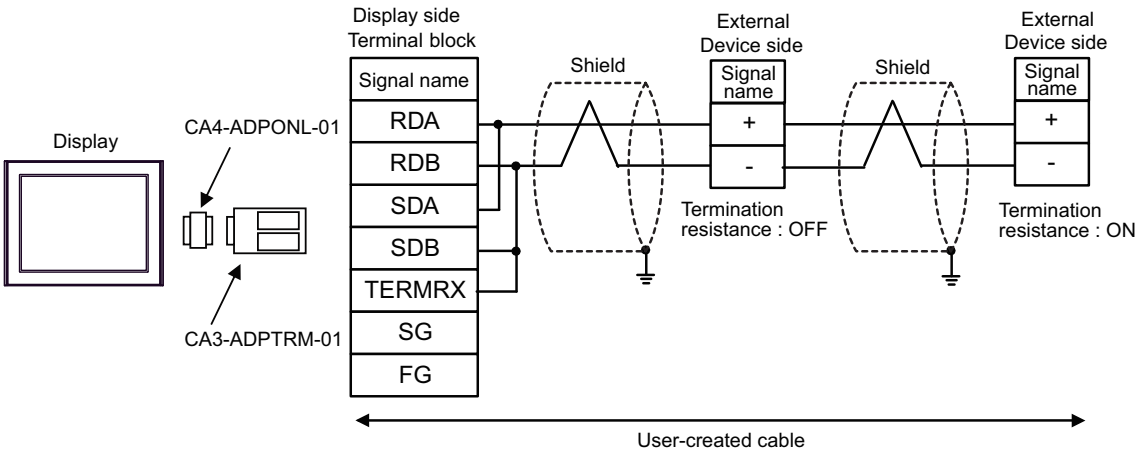

NOTE

- Set the termination resistance selector switch of the External Device which terminates the connection to ON.

19D)

- 1:1 Connection

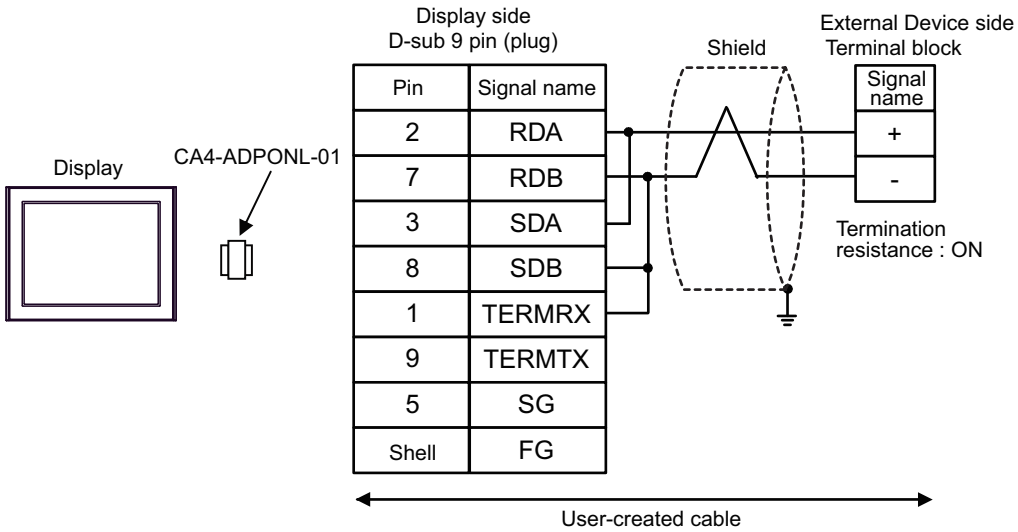

1:n Connection

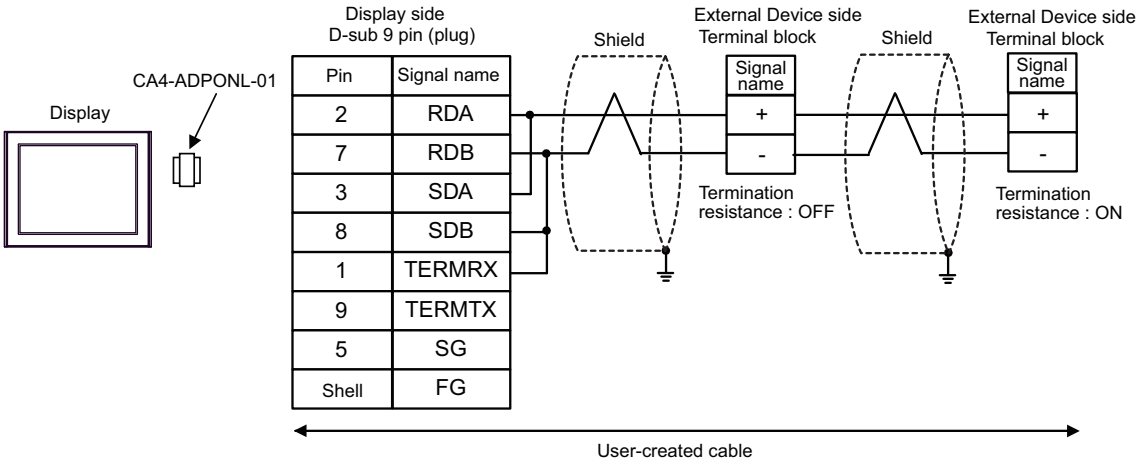

NOTE

- Set the termination resistance selector switch of the External Device which terminates the connection to ON.

19E)

- 1:1 Connection

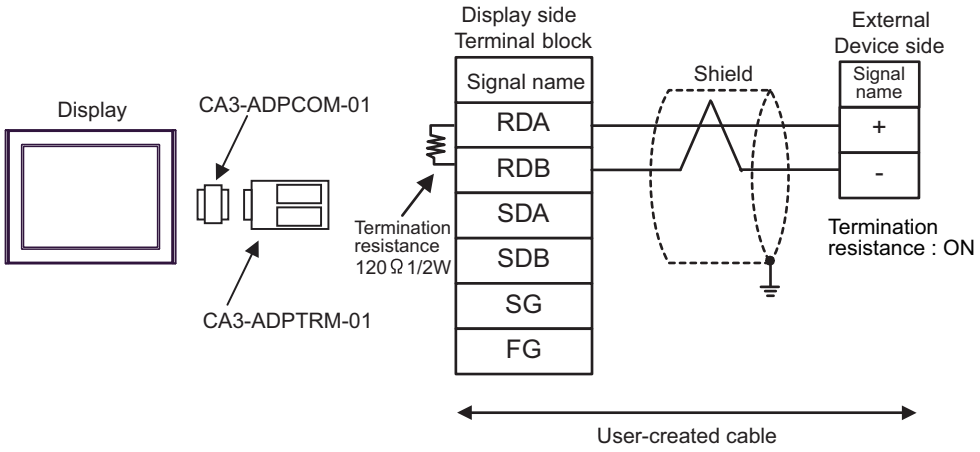

- 1:n Connection

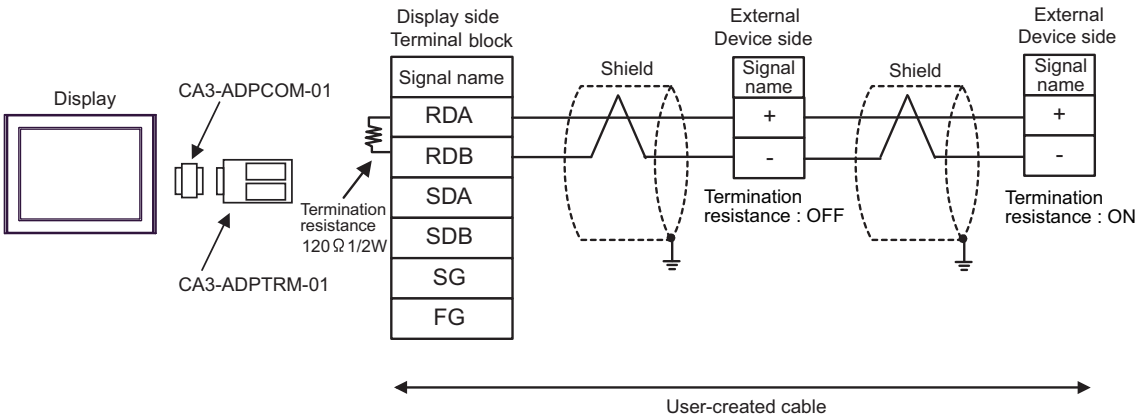

NOTE

- Set the termination resistance selector switch of the External Device which terminates the connection to ON.

19F)

- 1:1 Connection

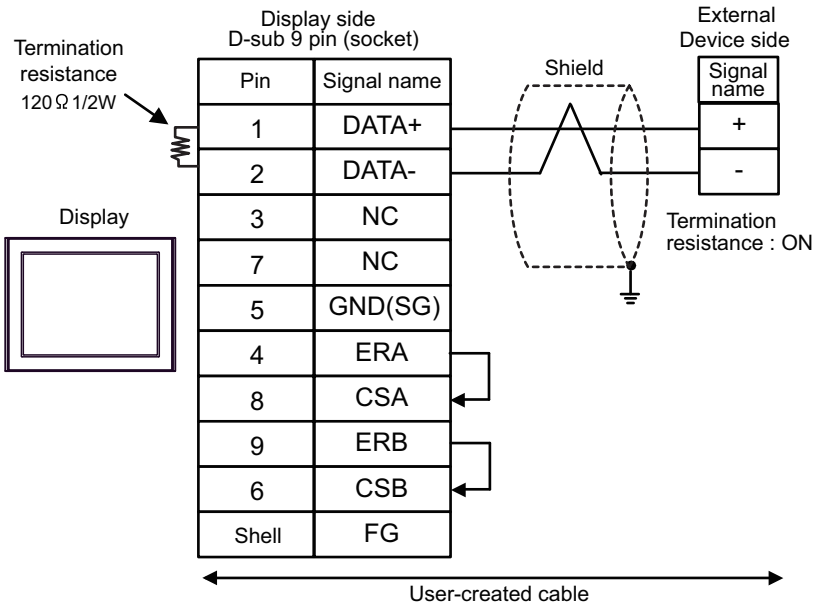

- 1:n Connection

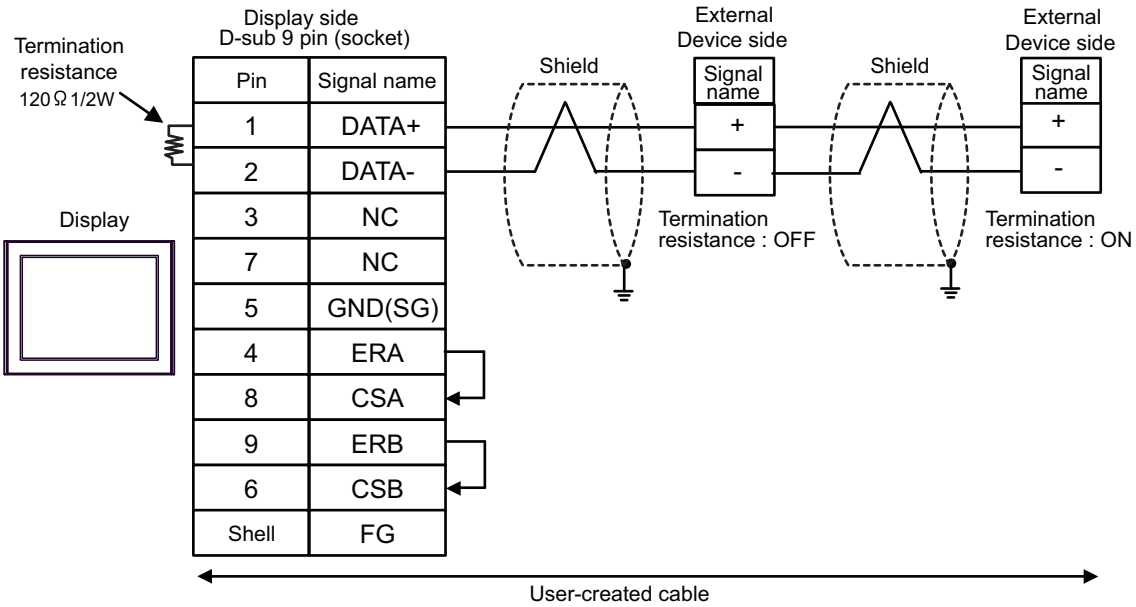

NOTE

- Set the termination resistance selector switch of the External Device which terminates the connection to ON.

19G)

- 1:1 Connection

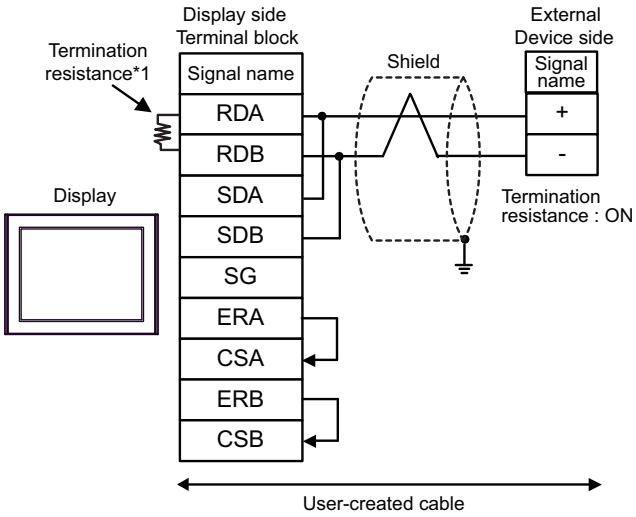

- 1:n Connection

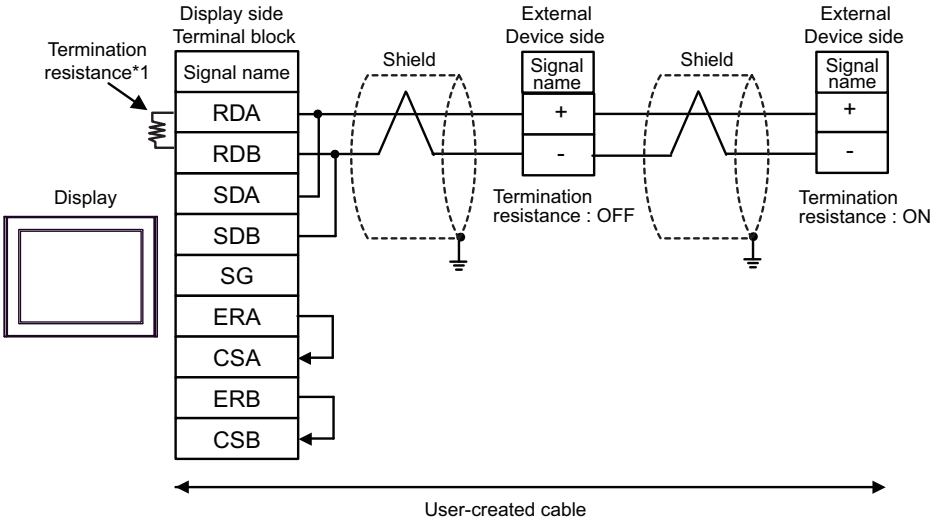

NOTE

- Set the termination resistance selector switch of the External Device which terminates the connection to ON.

*1 The resistance in the Display is used as the termination resistance. Set the value of the DIP Switch on the rear of the Display as shown in the table below.

DIP Switch No.	Set Value
1	OFF
2	OFF
3	ON
4	ON

19H)

- 1:1 Connection

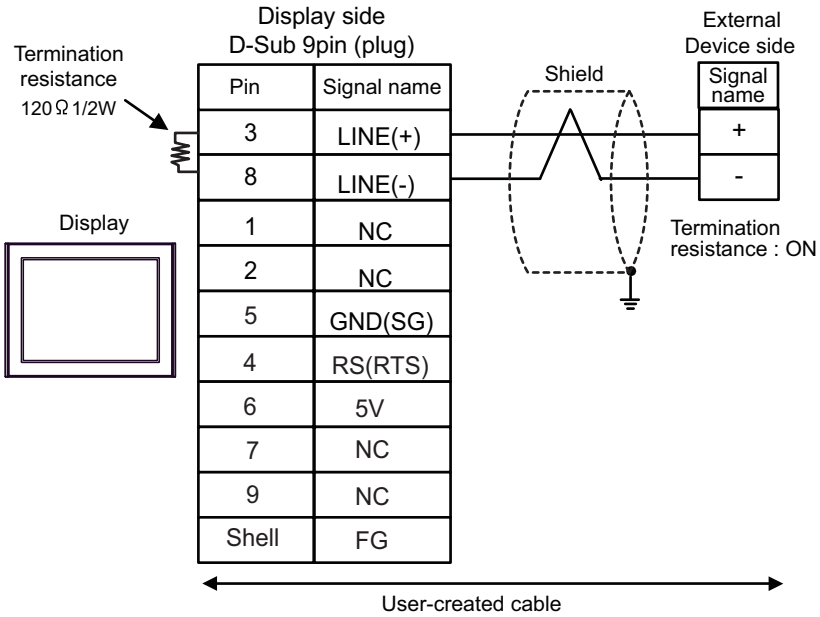

- 1:n Connection

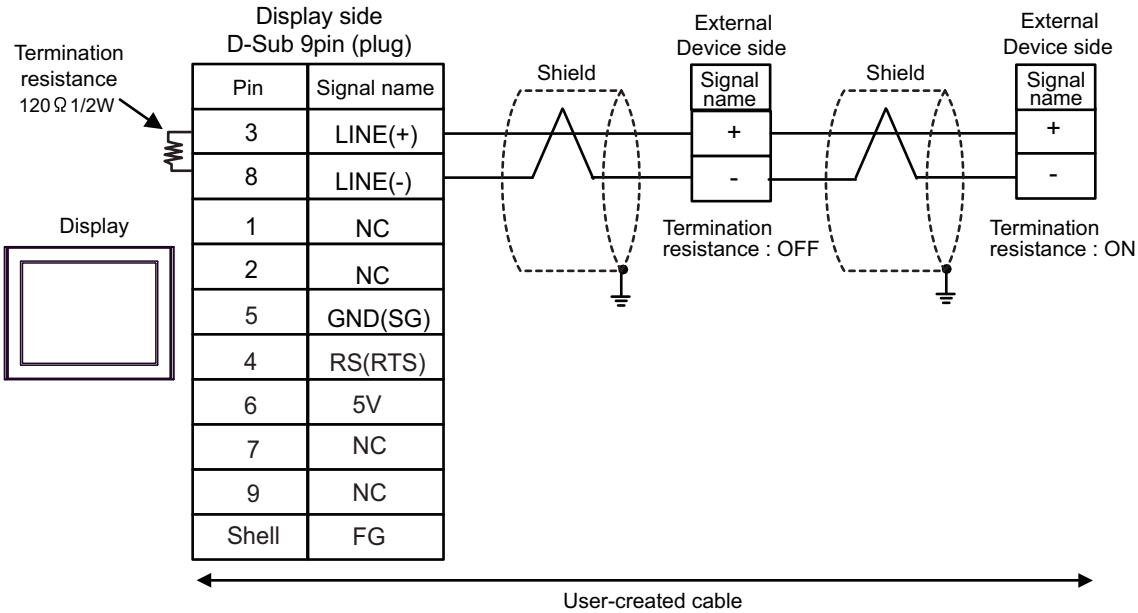

IMPORTANT

- The 5V output (Pin #6) on the Display is the power for the Siemens AG's PROFIBUS connector. Do not use it for other devices.

NOTE

- Set the termination resistance selector switch of the External Device which terminates the connection to ON.
- In COM on the GP-4107, the SG and FG terminals are isolated.

19I)

- 1:1 Connection

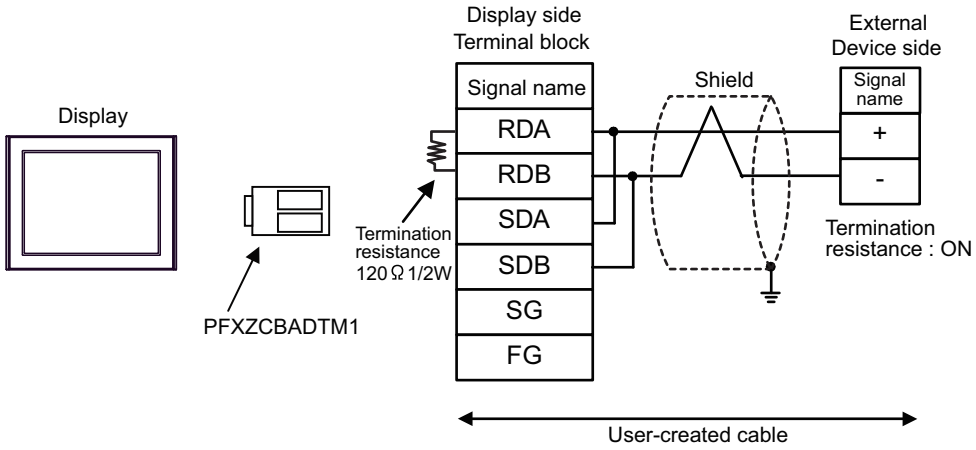

- 1:n Connection

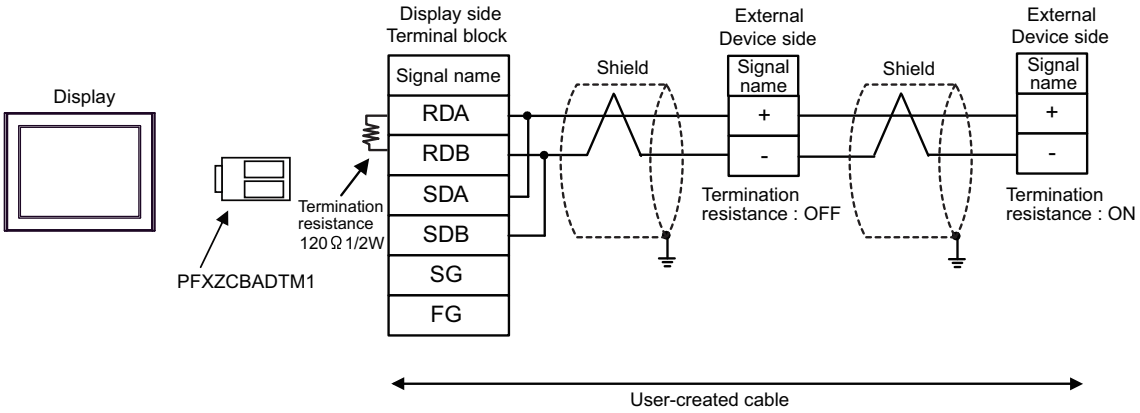

NOTE

- Set the termination resistance selector switch of the External Device which terminates the connection to ON.

19J)

- 1:1 Connection

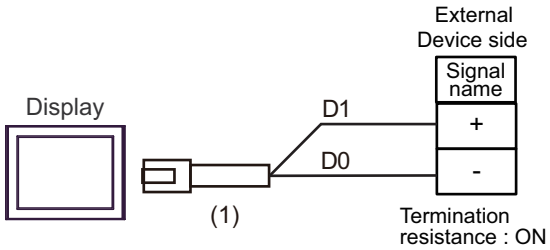

NOTE

- Set the termination resistance selector switch of the External Device which terminates the connection to ON.

- 1:n Connection

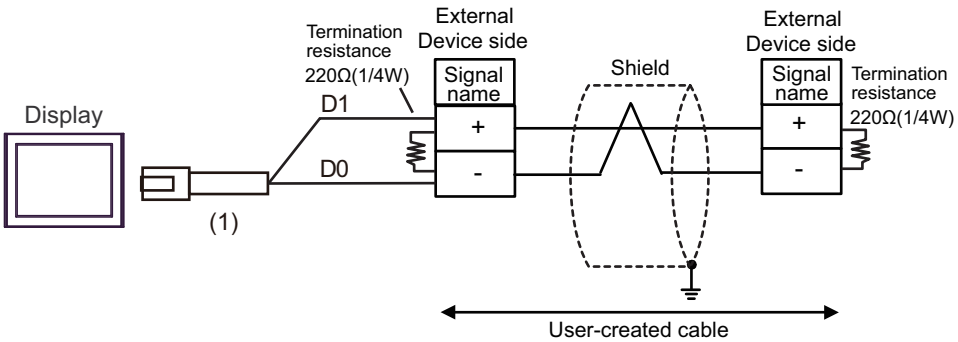

Number	Name	Notes
(1)	RJ45 RS-485 Cable (5m) by Pro-face PFXZLMCBRJR81	

19K)

- 1:1 Connection

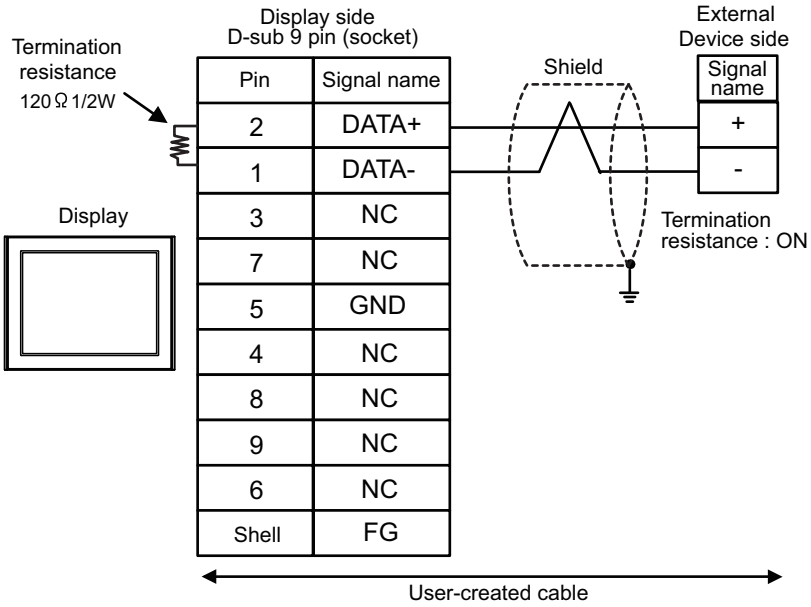

- 1:n Connection

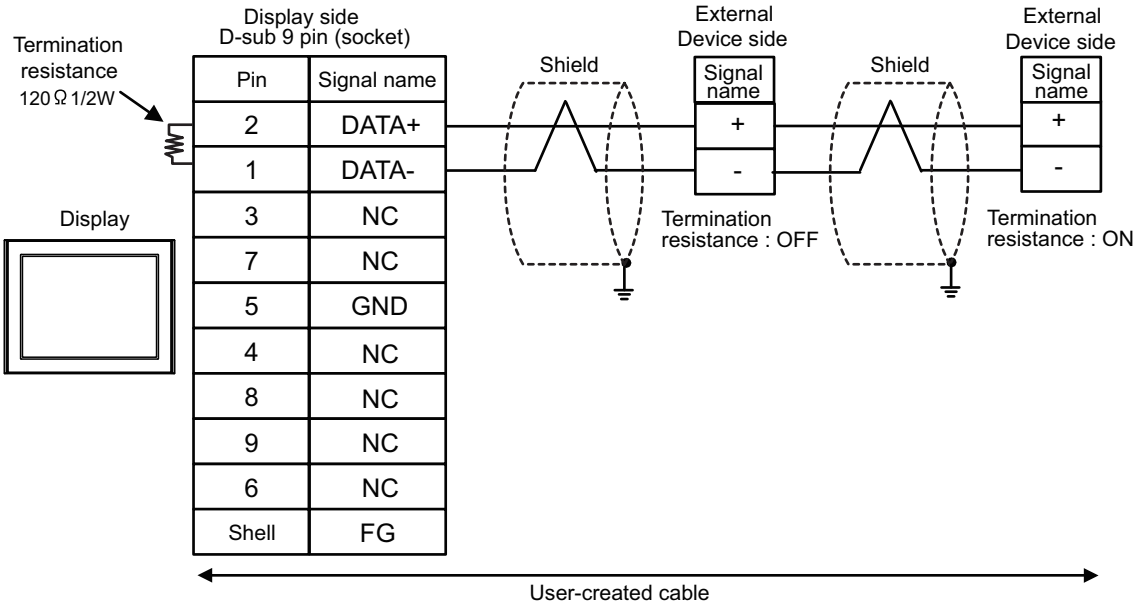

NOTE

- Set the termination resistance selector switch of the External Device which terminates the connection to ON.

6.20 Cable Diagram 20

Display (Connection Port)	Cable		Notes
GP3000*1 (COM1) AGP-3302B (COM2) GP-4*01TM (COM1) GP-Rear Module (COM1) ST3000*2 (COM2) LT3000 (COM1) IPC*3	20A	COM port conversion adapter by Pro-face CA3-ADPCOM-01 + Terminal block conversion adapter by Pro-face CA3-ADPTRM-01 + User-created cable	Cable length: 500m or less
	20B	User-created cable	
GP3000*4 (COM2)	20C	Online adapter by Pro-face CA4-ADPONL-01 + Terminal block conversion adapter by Pro-face CA3-ADPTRM-01 + User-created cable	Cable length: 500m or less
	20D	Online adapter by Pro-face CA4-ADPONL-01 + User-created cable	
GP-4106 (COM1) GP-4116T (COM1)	20E	User-created cable	Cable length: 500m or less
GP4000*5 (COM2) GP-4201T (COM1) GP6000 (COM2) SP5000 (COM1/2)*6 (COM1/2) SP-5B00 (COM2) ST6000*7 (COM2) ST-6200 (COM1) STM6000 (COM1) STC6000 (COM1) PS6000 (Basic Box) (COM1/2)	20F	RS-422 Terminal Block Conversion Adapter by Pro-face PFXZCBADTM1*8 + User-created cable	Cable length: 500m or less
	20B	User-created cable	
PE-4000B*9 PS5000*9 PS6000 (Optional Interface)*9	20G	User-created cable	Cable length: 500m or less

*1 All GP3000 models except AGP-3302B

*2 Except AST-3211A and AST-3302B

*3 Only the COM port which can communicate by RS-422/485 (4 wire) can be used. (Except PE-4000B, PS5000, and PS6000)
☞ ■ IPC COM Port (page 9)

*4 All GP3000 models except GP-3200 series and AGP-3302B

*5 All GP4000 models except GP-4100 Series, GP-4*01TM, GP-Rear Module, GP-4201T and GP-4*03T

*6 Except SP-5B00

*7 Except ST-6200

*8 When using a Terminal Block Conversion Adapter (CA3-ADPTRM-01) instead of the RS-422 Terminal Block Conversion Adapter, refer to Cable Diagram 20A.

*9 Only the COM port which can communicate by RS-422/485 (4 wire) can be used.
☞ ■ IPC COM Port (page 9)

20A)

- 1:1 Connection

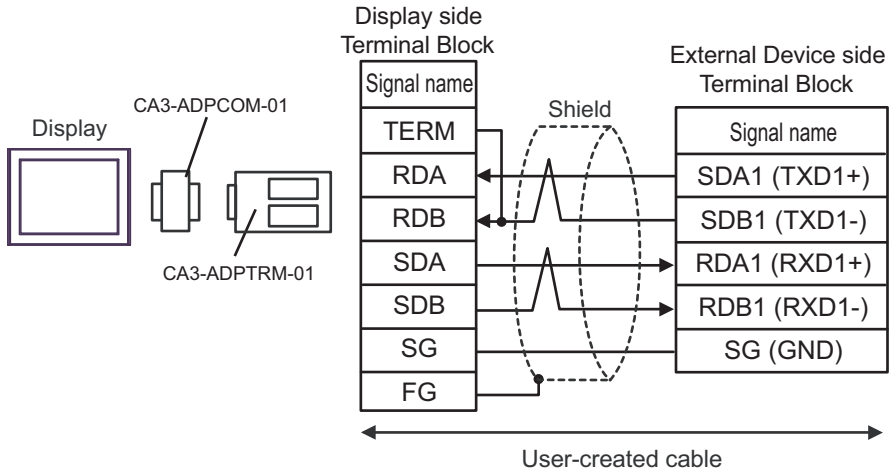

NOTE

- Please set the terminating resistor switch of the External Device to the "100Ω" position.

- 1:n Connection

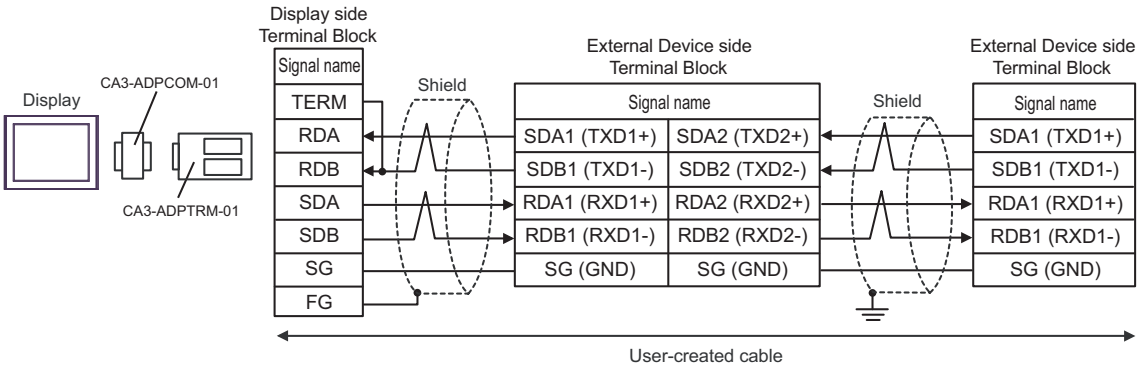

NOTE

- Please set the terminating resistor switch to the "100Ω" position only on the last External Device in the chain.

20B)

- 1:1 Connection

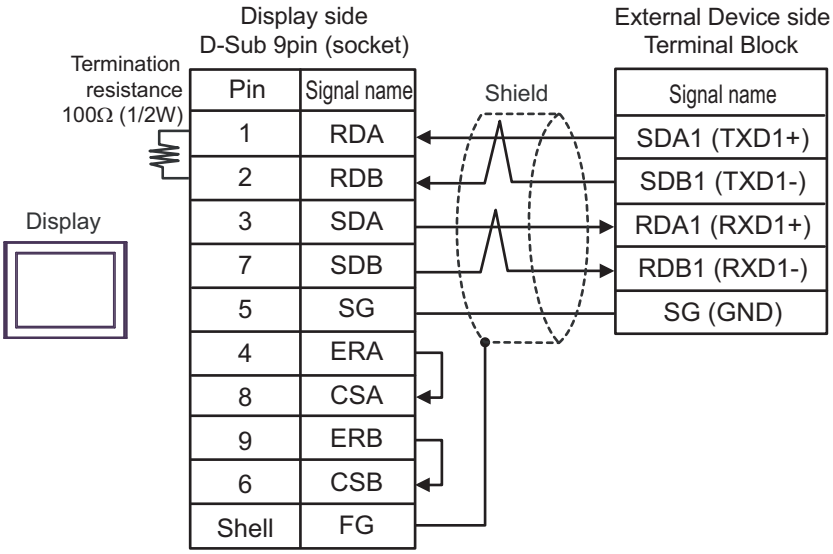

NOTE

- Please set the terminating resistor switch of the External Device to the "100Ω" position.

- 1:n Connection

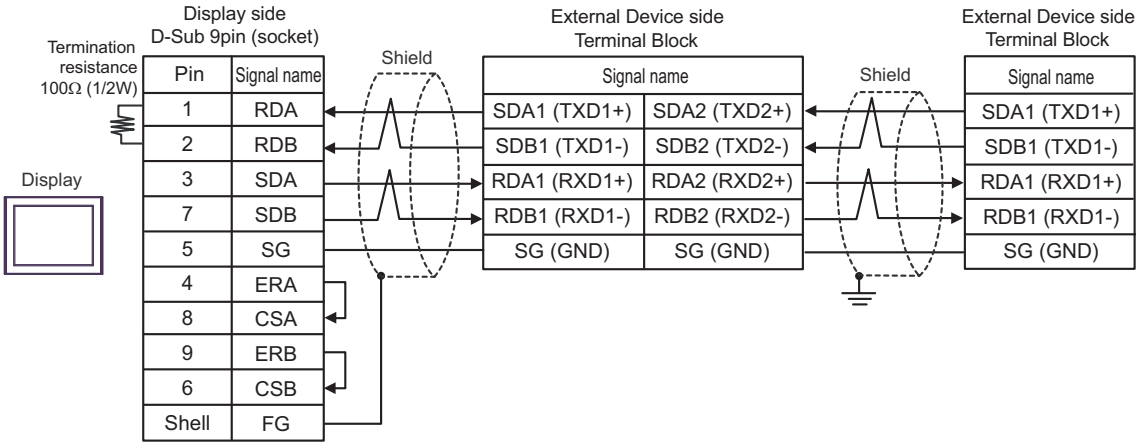

NOTE

- Please set the terminating resistor switch to the "100Ω" position only on the last External Device in the chain.

20C)

- 1:1 Connection

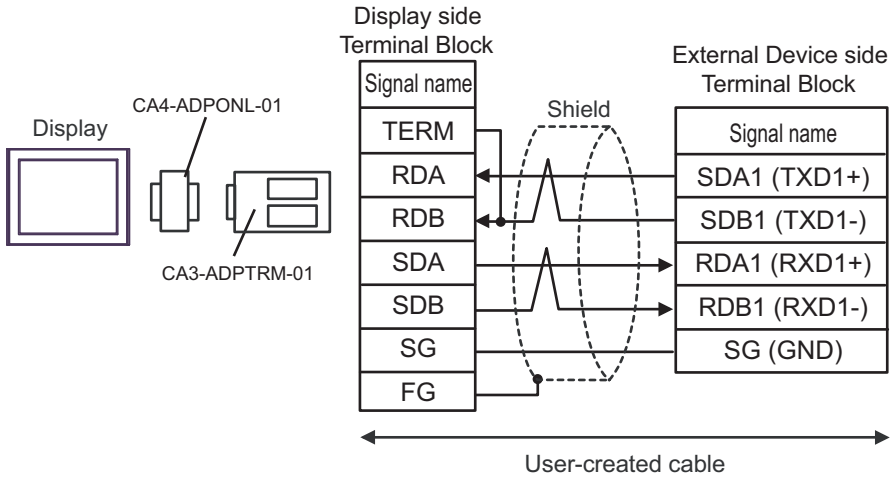

NOTE

- Please set the terminating resistor switch of the External Device to the "100Ω" position.

- 1:n Connection

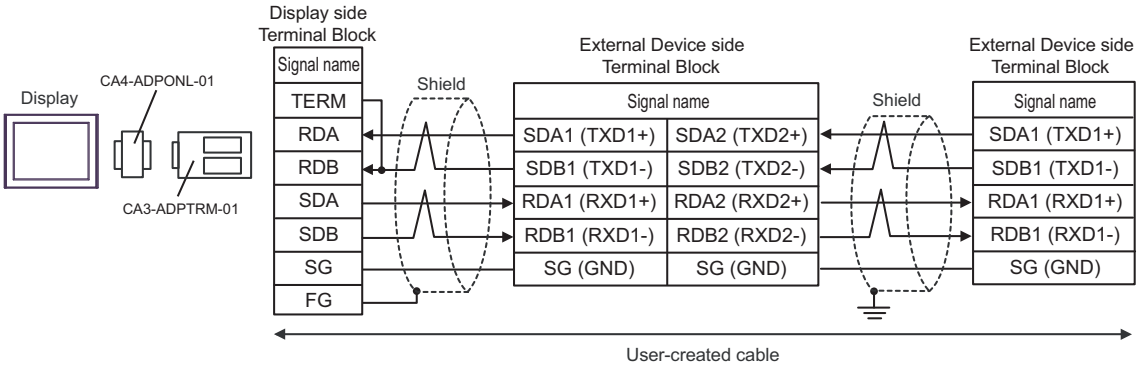

NOTE

- Please set the terminating resistor switch to the "100Ω" position only on the last External Device in the chain.

20D)

- 1:1 Connection

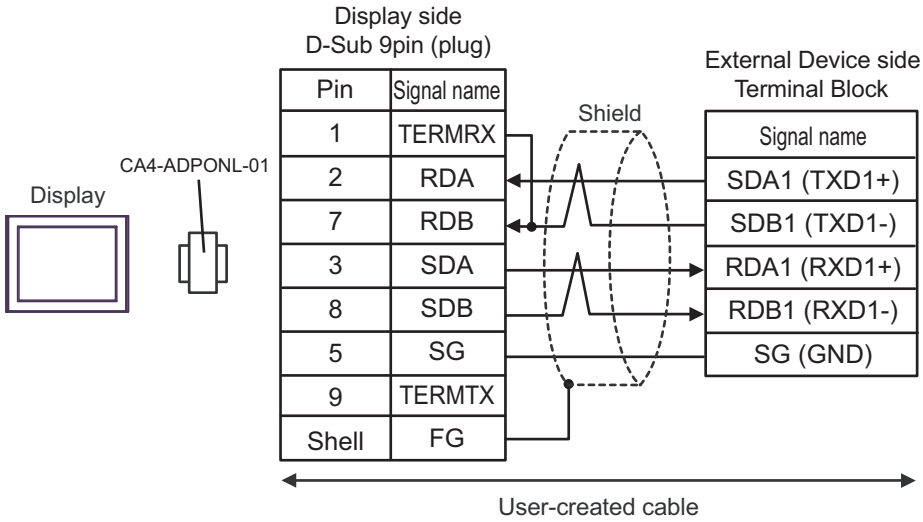

NOTE

- Please set the terminating resistor switch of the External Device to the "100Ω" position.

- 1:n Connection

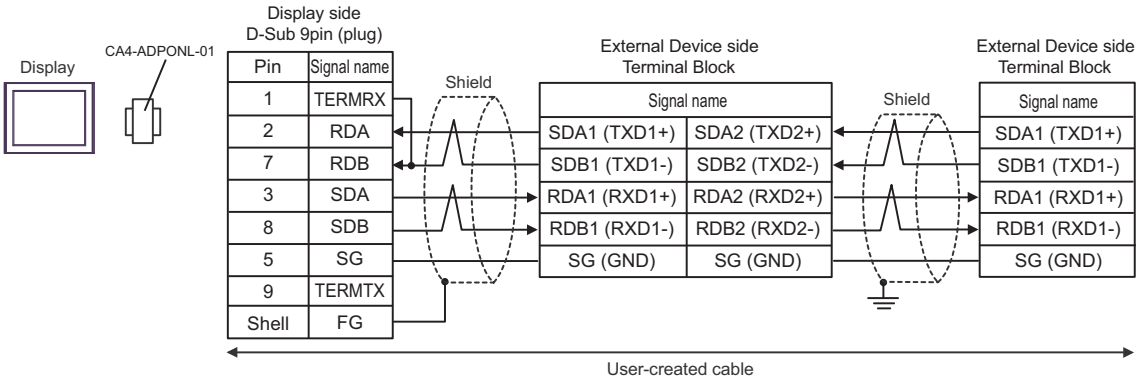

NOTE

- Please set the terminating resistor switch to the "100Ω" position only on the last External Device in the chain.

20E)

- 1:1 Connection

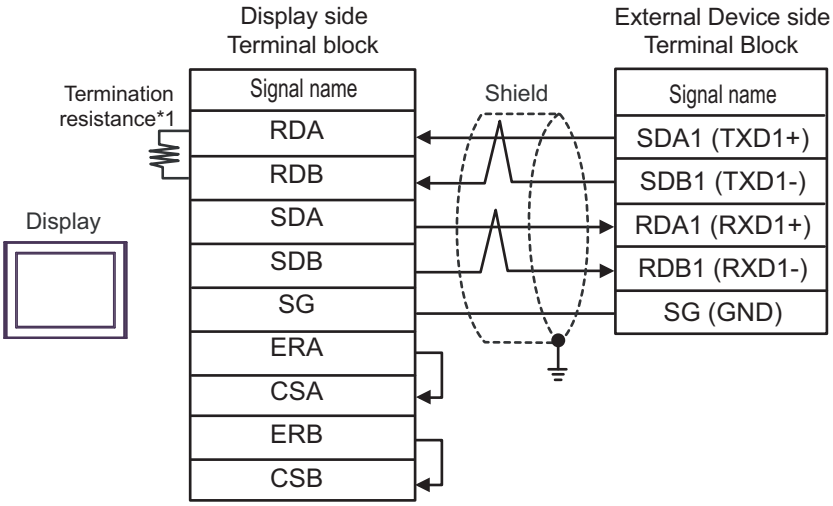

NOTE

- Please set the terminating resistor switch of the External Device to the "100Ω" position.

- 1:n Connection

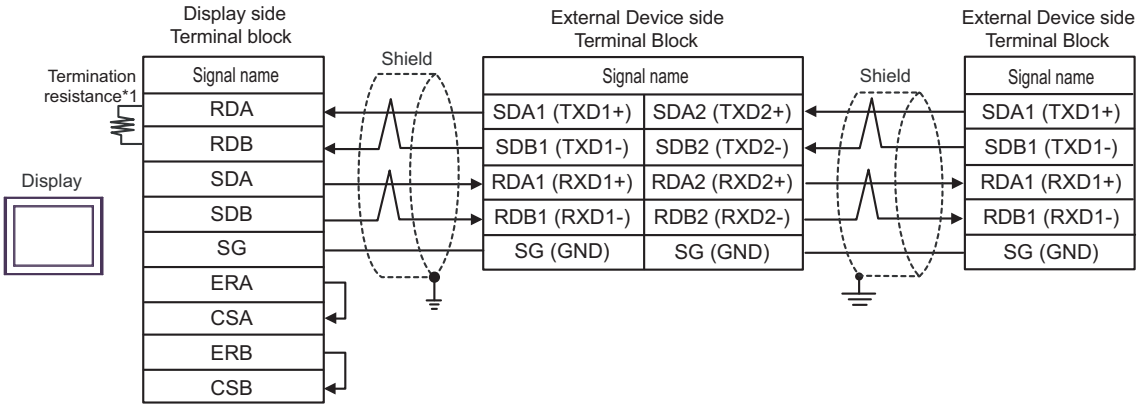

NOTE

- Please set the terminating resistor switch to the "100Ω" position only on the last External Device in the chain.

*1 The resistance in the Display is used as the termination resistance. Set the value of the DIP Switch on the rear of the Display as shown in the table below.

DIP Switch No.	Set Value
1	OFF
2	OFF
3	ON
4	ON

20F)

- 1:1 Connection

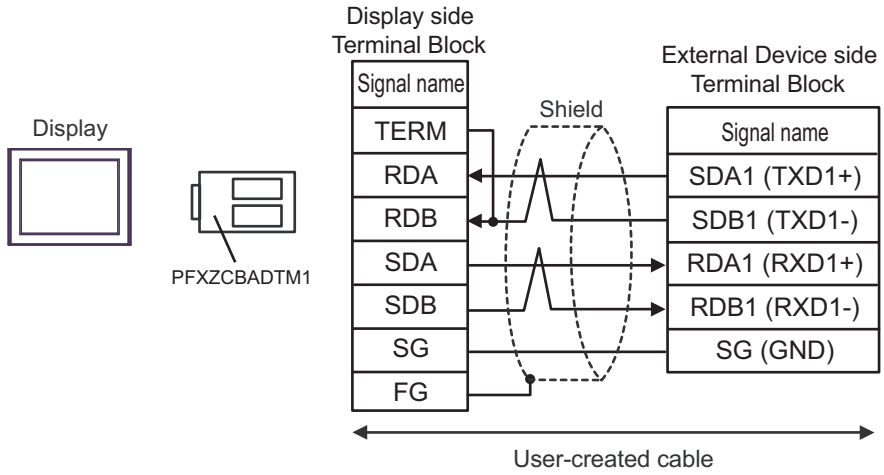

NOTE

- Please set the terminating resistor switch of the External Device to the "100Ω" position.

- 1:n Connection

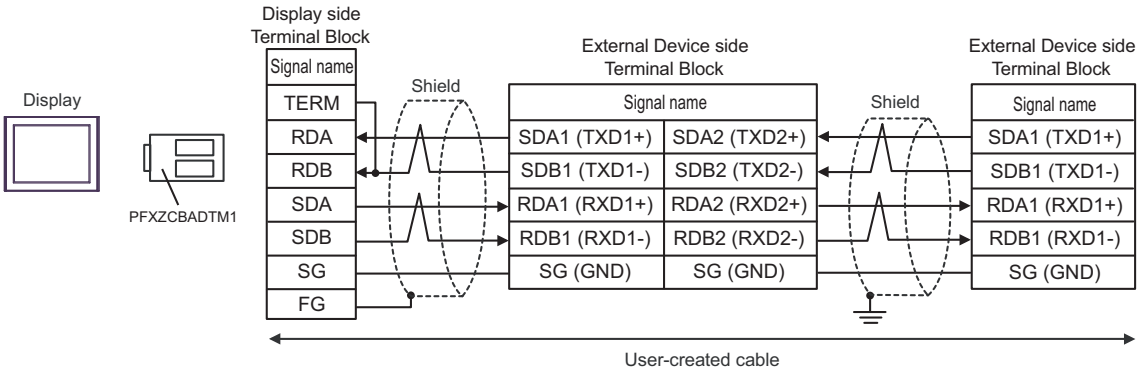

NOTE

- Please set the terminating resistor switch to the "100Ω" position only on the last External Device in the chain.

20G)

- 1:1 Connection

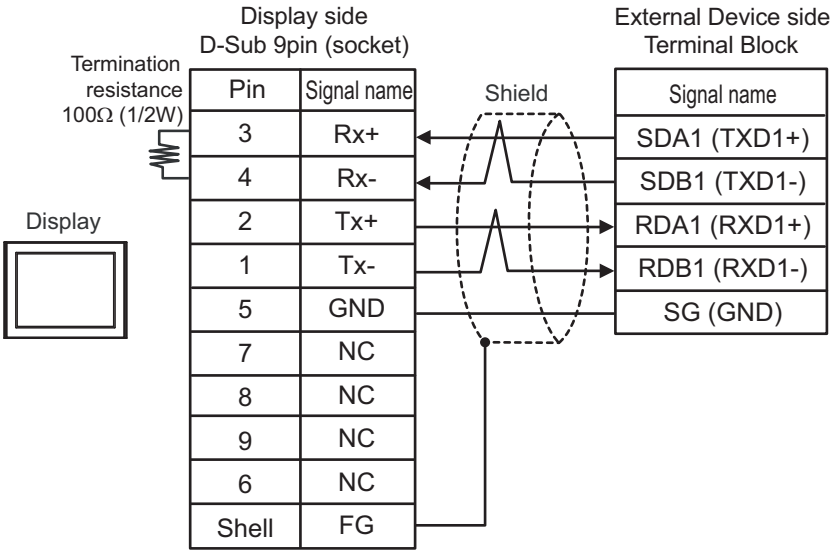

NOTE

- Please set the terminating resistor switch of the External Device to the "100Ω" position.

- 1:n Connection

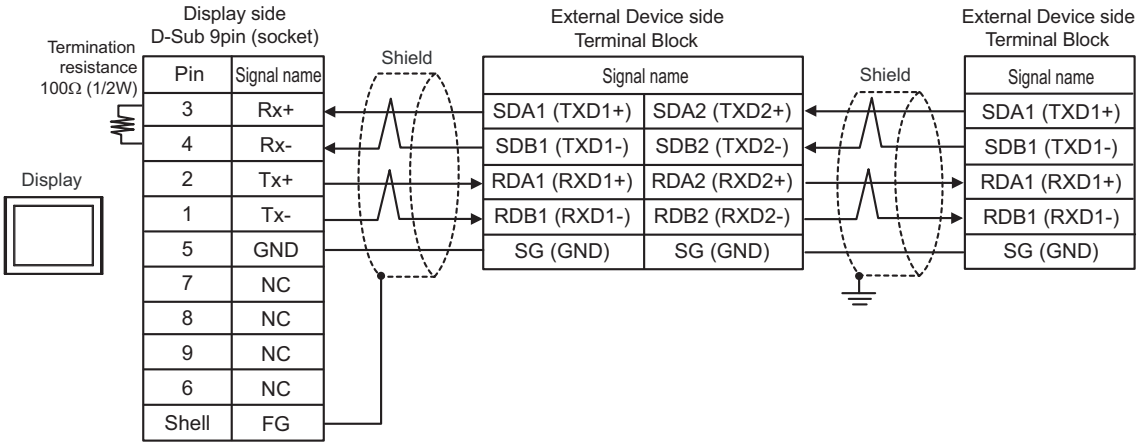

NOTE

- Please set the terminating resistor switch to the "100Ω" position only on the last External Device in the chain.

6.21 Cable Diagram 21

Display (Connection Port)	Cable		Notes
GP3000[*1] (COM1) AGP-3302B (COM2) GP-4*01TM (COM1) GP-Rear Module (COM1) ST3000[*2] (COM2) LT3000 (COM1)	21A	COM port conversion adapter by Pro-face CA3-ADPCOM-01 + Terminal block conversion adapter by Pro-face CA3-ADPTRM-01 + User-created cable	Cable length: 500m or less
	21B	User-created cable	
GP3000[*3] (COM2)	21C	Online adapter by Pro-face CA4-ADPONL-01 + Terminal block conversion adapter by Pro-face CA3-ADPTRM-01 + User-created cable	Cable length: 500m or less
	21D	Online adapter by Pro-face CA4-ADPONL-01 + User-created cable	
IPC[*4]	21E	COM port conversion adapter by Pro-face CA3-ADPCOM-01 + Terminal block conversion adapter by Pro-face CA3-ADPTRM-01 + User-created cable	Cable length: 500m or less
	21F	User-created cable	
GP-4106 (COM1) GP-4116T (COM1)	21G	User-created cable	Cable length: 500m or less
GP-4107 (COM1) GP-4*03T[*5] (COM2) GP-4203T (COM1)	21H	User-created cable	Cable length: 500m or less
GP4000[*6] (COM2) GP-4201T (COM1) GP6000 (COM2) SP5000 (COM1/2)[*7] (COM1/2) SP-5B00 (COM2) ST6000[*8] (COM2) ST-6200 (COM1) STM6000 (COM1) STC6000 (COM1) PS6000 (Basic Box) (COM1/2)	21I	RS-422 Terminal Block Conversion Adapter by Pro-face PFXZCBADTM1[*9] + User-created cable	Cable length: 500m or less
	21B	User-created cable	
LT-4*01TM (COM1) LT-Rear Module (COM1)	21J	RJ45 RS-485 Cable (5m) by Pro-face PFXZLMCBRJR81	Cable length: 200m or less

Display (Connection Port)	Cable		Notes
PE-4000B*10 PS5000*10 PS6000 (Optional Interface)*10	21K	User-created cable	Cable length: 500m or less

*1 All GP3000 models except AGP-3302B

*2 Except AST-3211A and AST-3302B

*3 All GP3000 models except GP-3200 series and AGP-3302B

*4 Only the COM port which can communicate by RS-422/485 (2 wire) can be used. (Except PE-4000B, PS5000, and PS6000)
☞ ■ IPC COM Port (page 9)

*5 Except GP-4203T

*6 All GP4000 models except GP-4100 Series, GP-4*01TM, GP-Rear Module, GP-4201T and GP-4*03T

*7 Except SP-5B00

*8 Except ST-6200

*9 When using a Terminal Block Conversion Adapter (CA3-ADPTRM-01) instead of the RS-422 Terminal Block Conversion Adapter, refer to Cable Diagram 21A.

*10 Only the COM port which can communicate by RS-422/485 (2 wire) can be used.
☞ ■ IPC COM Port (page 9)

21A)

- 1:1 Connection

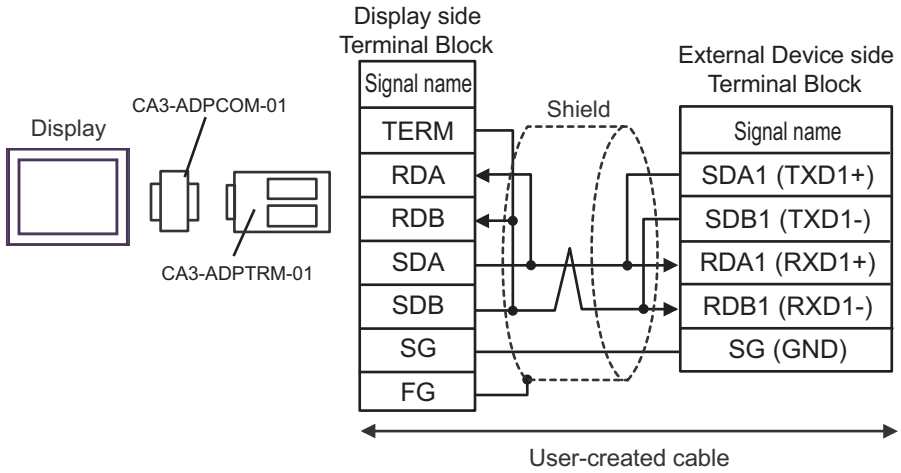

NOTE

- Please set the terminating resistor switch of the External Device to the "100Ω" position.

- 1:n Connection

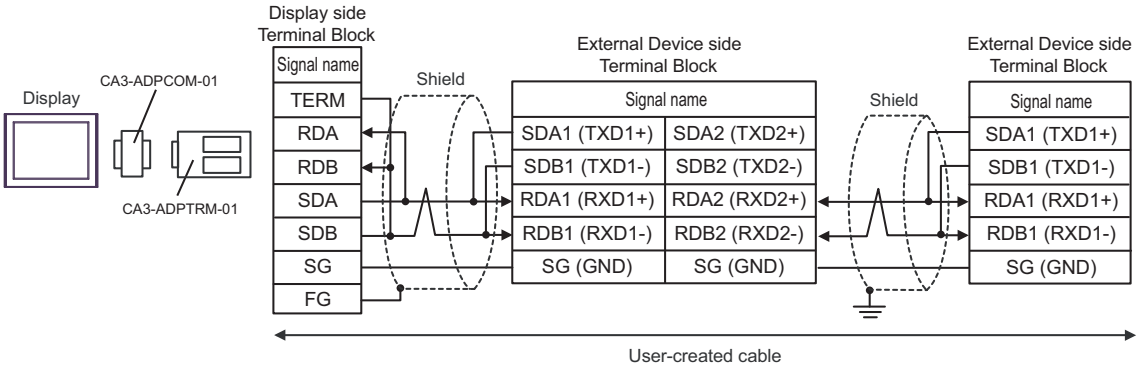

NOTE

- Please set the terminating resistor switch to the "100Ω" position only on the last External Device in the chain.

21B)

- 1:1 Connection

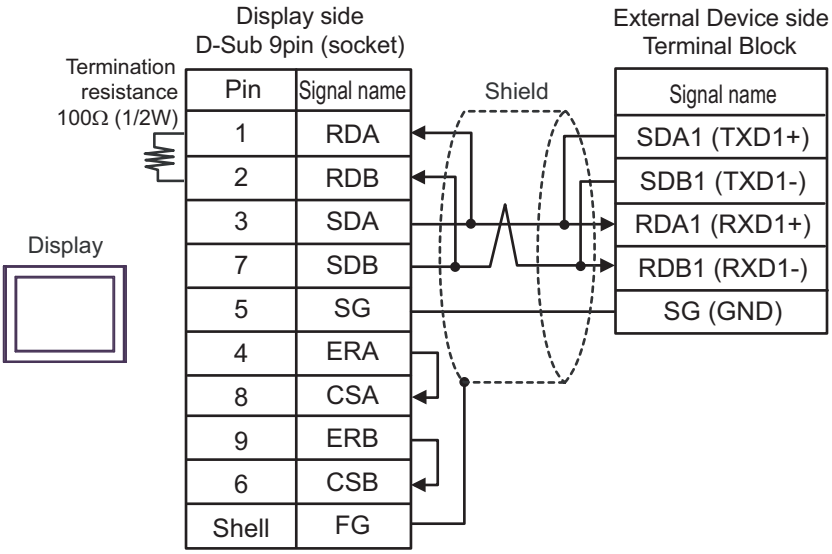

NOTE

- Please set the terminating resistor switch of the External Device to the "100Ω" position.

- 1:n Connection

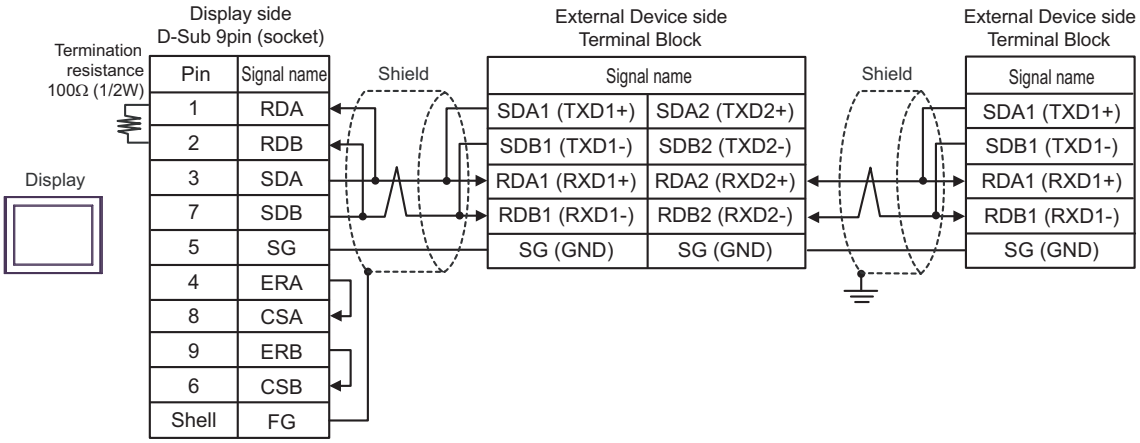

NOTE

- Please set the terminating resistor switch to the "100Ω" position only on the last External Device in the chain.

21C)

- 1:1 Connection

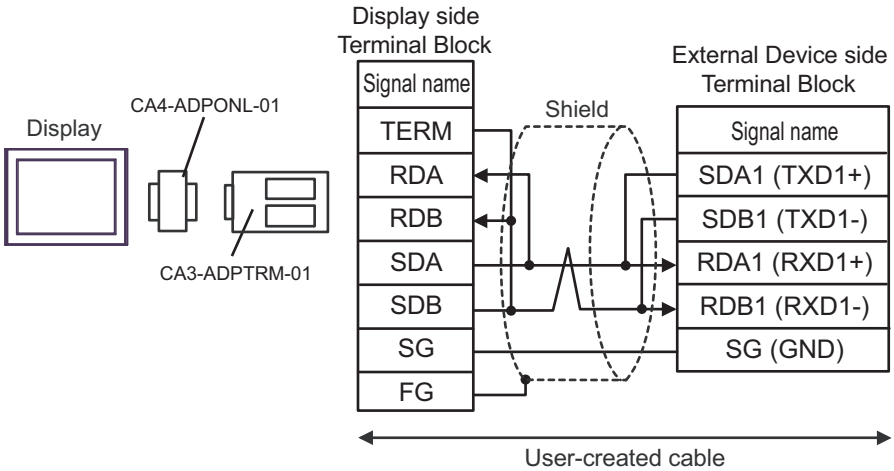

NOTE

- Please set the terminating resistor switch of the External Device to the "100Ω" position.

- 1:n Connection

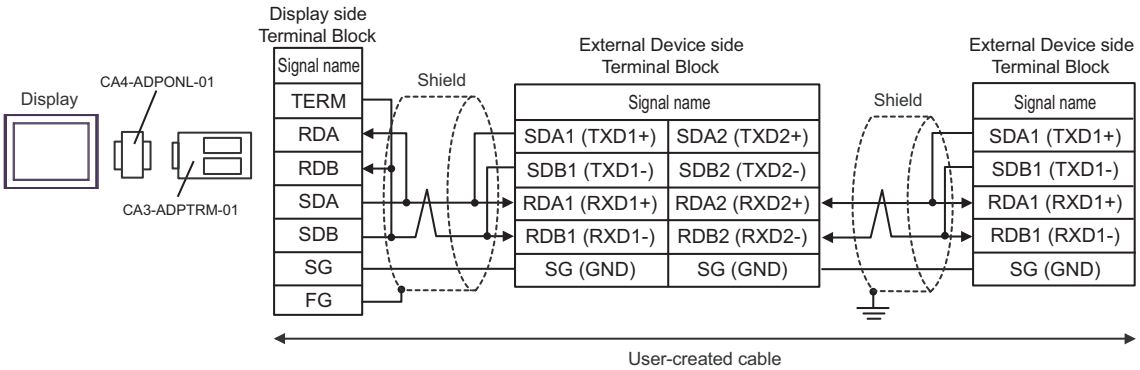

NOTE

- Please set the terminating resistor switch to the "100Ω" position only on the last External Device in the chain.

21D)

- 1:1 Connection

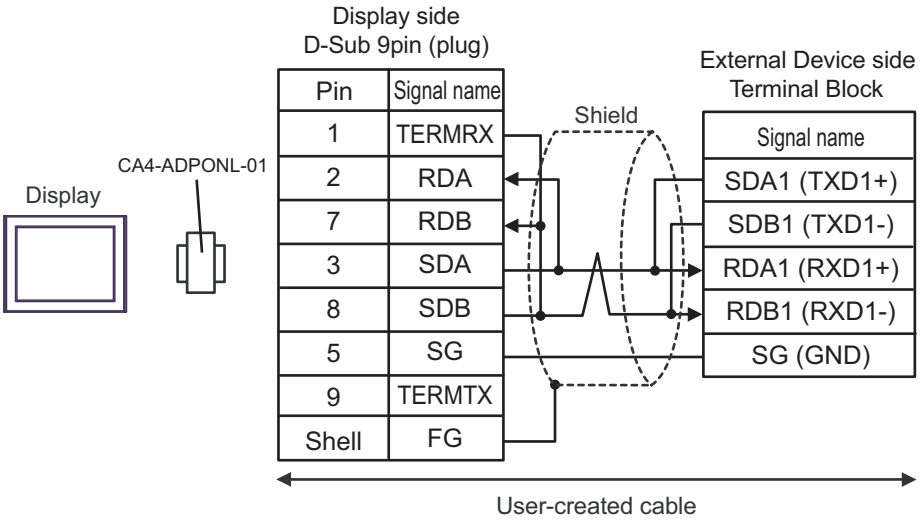

NOTE

- Please set the terminating resistor switch of the External Device to the "100Ω" position.

- 1:n Connection

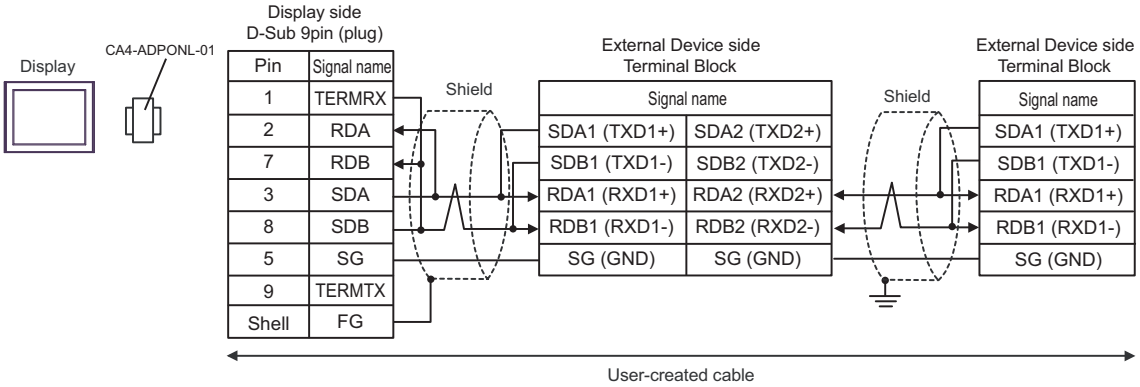

NOTE

- Please set the terminating resistor switch to the "100Ω" position only on the last External Device in the chain.

21E)

- 1:1 Connection

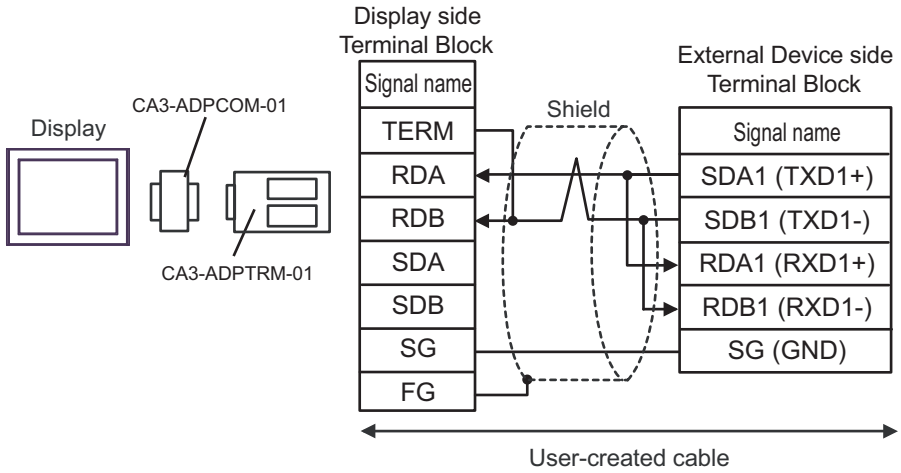

NOTE

- Please set the terminating resistor switch of the External Device to the "100Ω" position.

- 1:n Connection

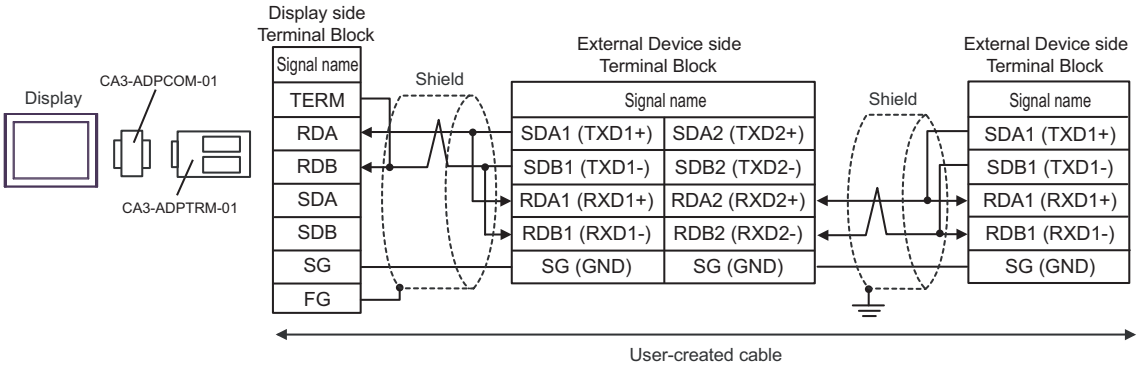

NOTE

- Please set the terminating resistor switch to the "100Ω" position only on the last External Device in the chain.

21F)

- 1:1 Connection

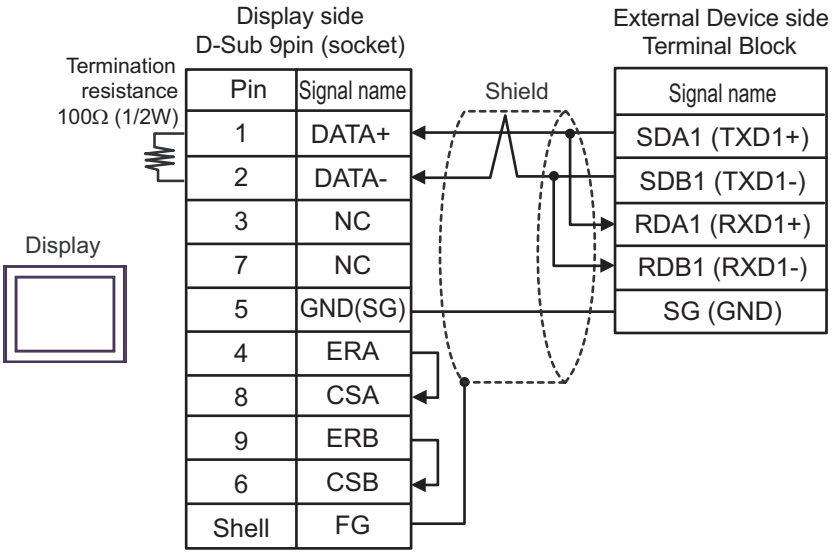

NOTE

- Please set the terminating resistor switch of the External Device to the "100Ω" position.

- 1:n Connection

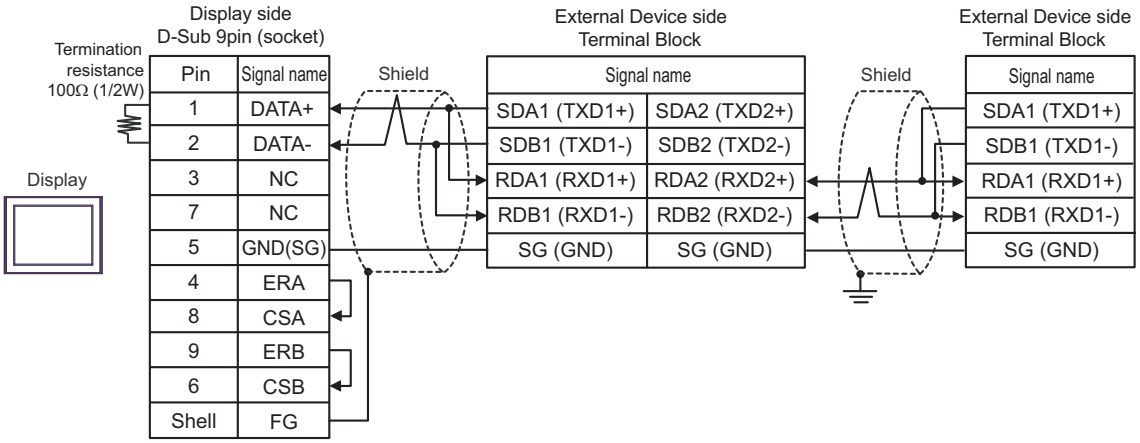

NOTE

- Please set the terminating resistor switch to the "100Ω" position only on the last External Device in the chain.

21G)

- 1:1 Connection

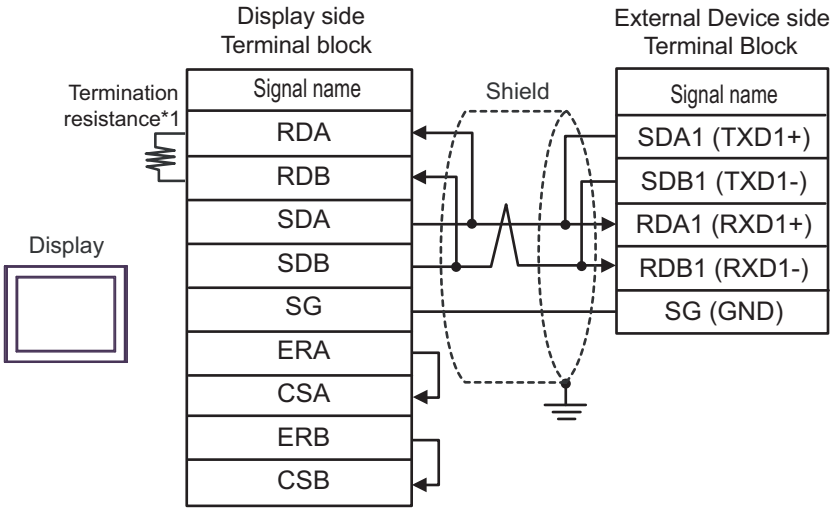

NOTE

- Please set the terminating resistor switch of the External Device to the "100Ω" position.

- 1:n Connection

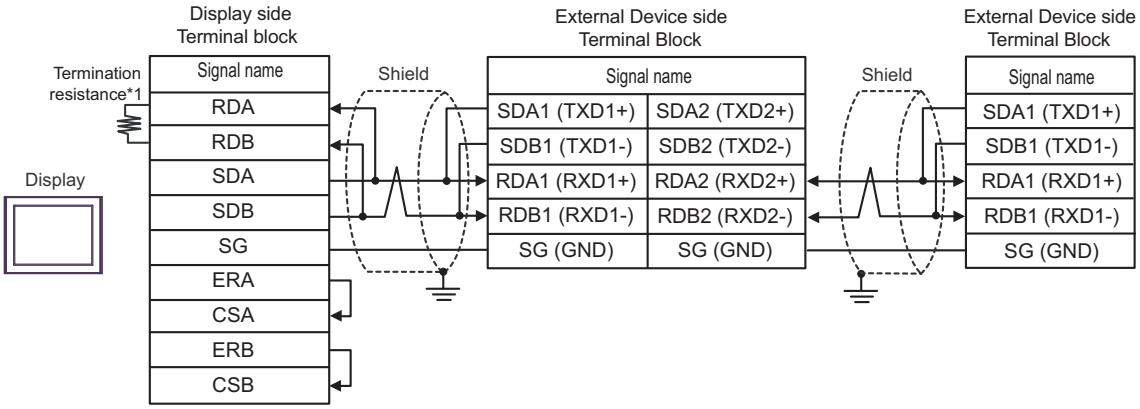

NOTE

- Please set the terminating resistor switch to the "100Ω" position only on the last External Device in the chain.

*1 The resistance in the Display is used as the termination resistance. Set the value of the DIP Switch on the rear of the Display as shown in the table below.

DIP Switch No.	Set Value
1	OFF
2	OFF
3	ON
4	ON

21H)

- 1:1 Connection

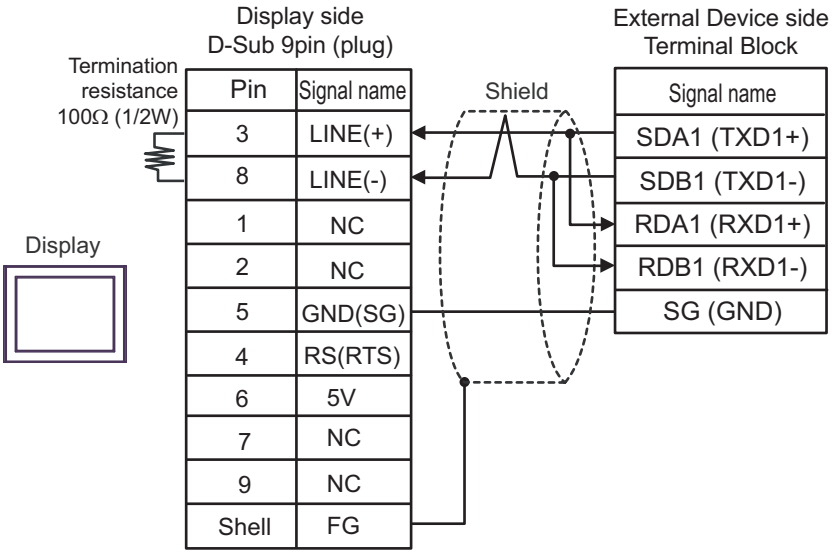

IMPORTANT

- The 5V output (Pin #6) on the Display is the power for the Siemens AG's PROFIBUS connector. Do not use it for other devices.

NOTE

- Please set the terminating resistor switch of the External Device to the "100Ω" position.
- In COM on the GP-4107, the SG and FG terminals are isolated.

- 1:n Connection

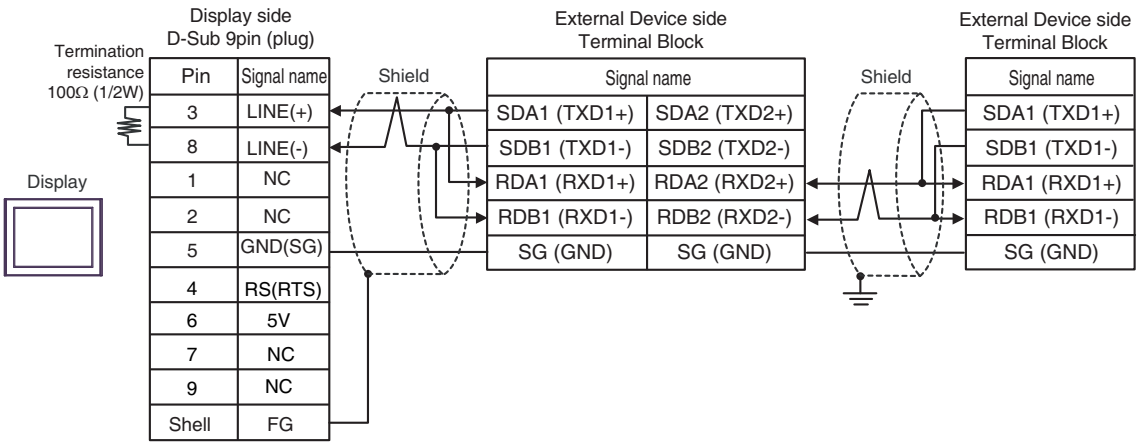

IMPORTANT

- The 5V output (Pin #6) on the Display is the power for the Siemens AG's PROFIBUS connector. Do not use it for other devices.

NOTE

- Please set the terminating resistor switch to the "100Ω" position only on the last External Device in the chain.
- In COM on the GP-4107, the SG and FG terminals are isolated.

21I)

- 1:1 Connection

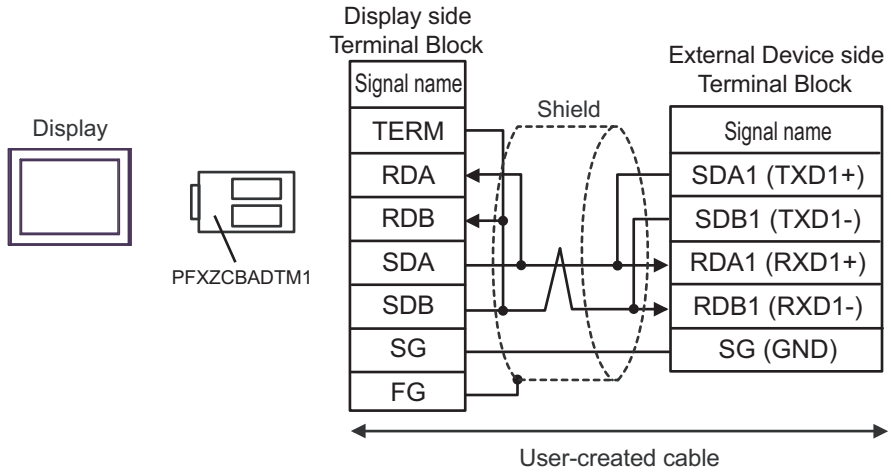

NOTE

- Please set the terminating resistor switch of the External Device to the "100Ω" position.

- 1:n Connection

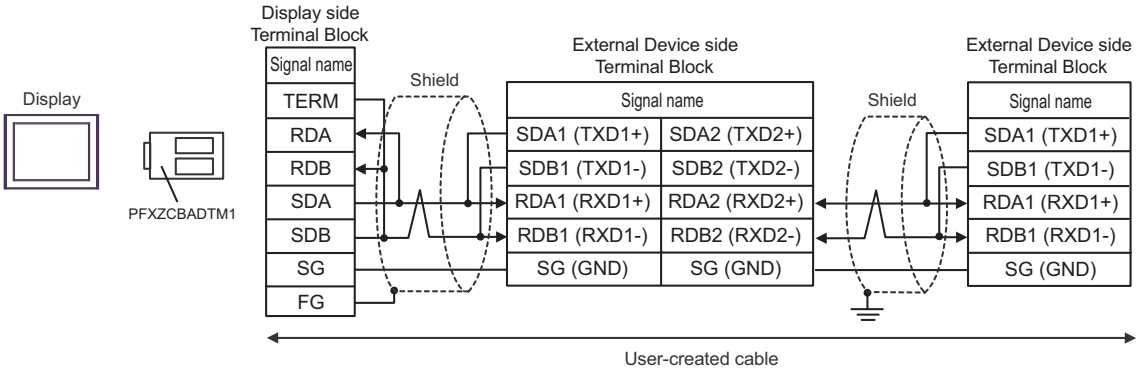

NOTE

- Please set the terminating resistor switch to the "100Ω" position only on the last External Device in the chain.

21J)

- 1:1 Connection

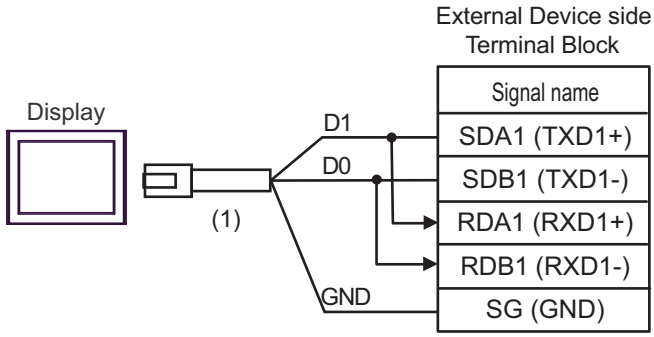

NOTE

- Please set the terminating resistor switch of the External Device to the "100Ω" position.

- 1:n Connection

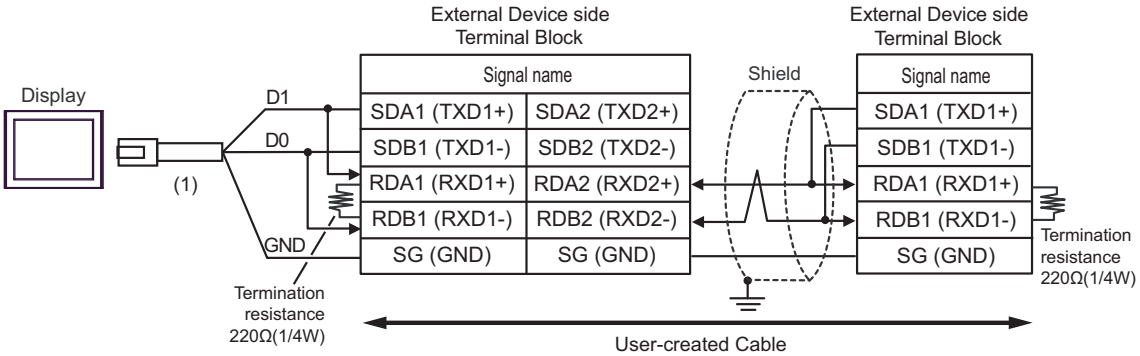

Number	Name	Notes
(1)	RJ45 RS-485 Cable (5m) by Pro-face PFXZLMCBRJR81	

21K)

- 1:1 Connection

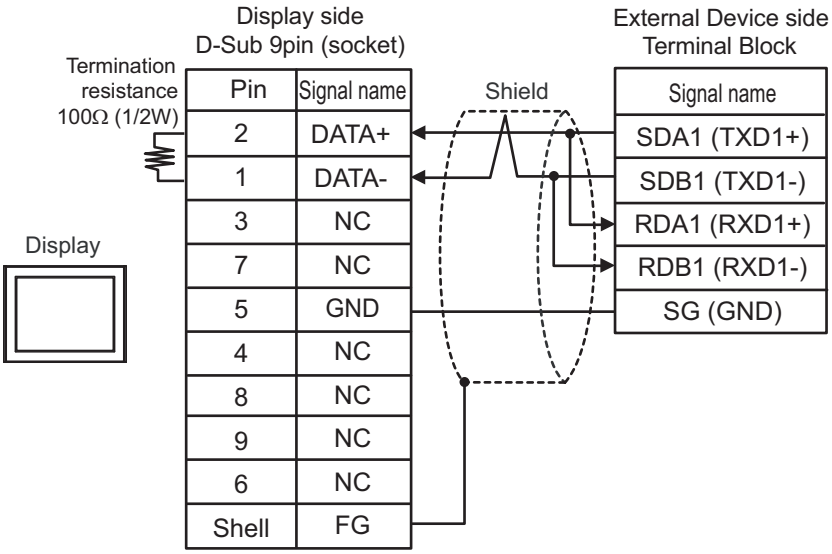

NOTE

- Please set the terminating resistor switch of the External Device to the "100Ω" position.

- 1:n Connection

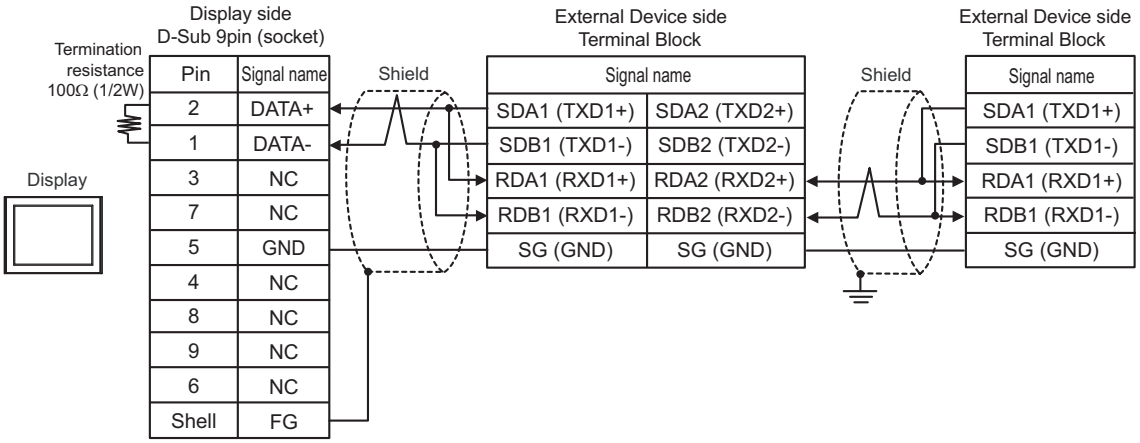

NOTE

- Please set the terminating resistor switch to the "100Ω" position only on the last External Device in the chain.

6.22 Cable Diagram 22

Display (Connection Port)	Cable		Notes
GP3000*1 (COM1) AGP-3302B (COM2) GP-4*01TM (COM1) GP-Rear Module (COM1) ST3000*2 (COM2) LT3000 (COM1) IPC*3	22A	COM port conversion adapter by Pro-face CA3-ADPCOM-01 + Terminal block conversion adapter by Pro-face CA3-ADPTRM-01 + User-created cable	Cable length: 500m or less
	22B	User-created cable	
GP3000*4 (COM2)	22C	Online adapter by Pro-face CA4-ADPONL-01 + Terminal block conversion adapter by Pro-face CA3-ADPTRM-01 + User-created cable	Cable length: 500m or less
	22D	Online adapter by Pro-face CA4-ADPONL-01 + User-created cable	
GP-4106 (COM1) GP-4116T (COM1)	22E	User-created cable	Cable length: 500m or less
GP4000*5 (COM2) GP-4201T (COM1) GP6000 (COM2) SP5000 (COM1/2)*6 (COM1/2) SP-5B00 (COM2) ST6000*7 (COM2) ST-6200 (COM1) STM6000 (COM1) STC6000 (COM1) PS6000 (Basic Box) (COM1/2)	22F	RS-422 Terminal Block Conversion Adapter by Pro-face PFXZCBADTM1*8 + User-created cable	Cable length: 500m or less
	22B	User-created cable	
PE-4000B*9 PS5000*9 PS6000 (Optional Interface)*9	22G	User-created cable	Cable length: 500m or less

*1 All GP3000 models except AGP-3302B

*2 Except AST-3211A and AST-3302B

*3 Only the COM port which can communicate by RS-422/485 (4 wire) can be used. (Except PE-4000B, PS5000, and PS6000)
☞ ■ IPC COM Port (page 9)

*4 All GP3000 models except GP-3200 series and AGP-3302B.

*5 All GP4000 models except GP-4100 Series, GP-4*01TM, GP-Rear Module, GP-4201T and GP-4*03T

*6 Except SP-5B00

*7 Except ST-6200

*8 When using a Terminal Block Conversion Adapter (CA3-ADPTRM-01) instead of the RS-422 Terminal Block Conversion Adapter, refer to Cable Diagram 22A.

*9 Only the COM port which can communicate by RS-422/485 (4 wire) can be used.
☞ ■ IPC COM Port (page 9)

Recommended cables and connectors

Item	Type	Manufacturer
10BASE-T cable	SGLPEV-T 0.5mmx4P*1	Mitsubishi Electric Corporation
RJ45 connector	5-554720-3	Tyco Electronics AMP K.K.

*1 Do not use pin number 2 or 8.

22A)

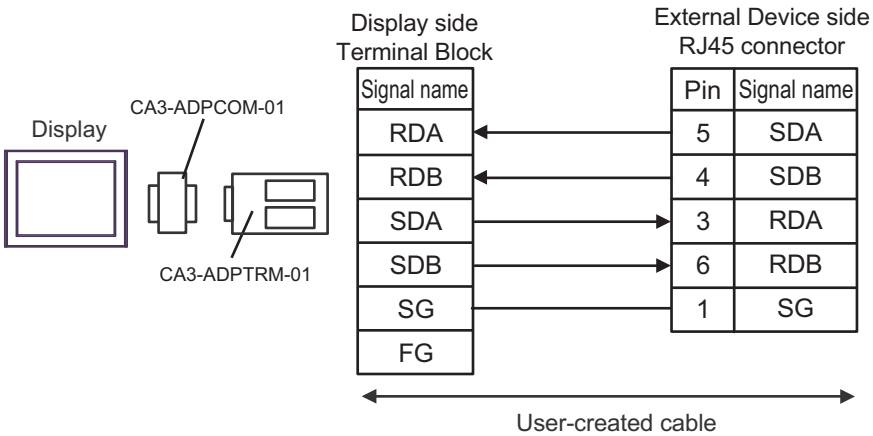

22B)

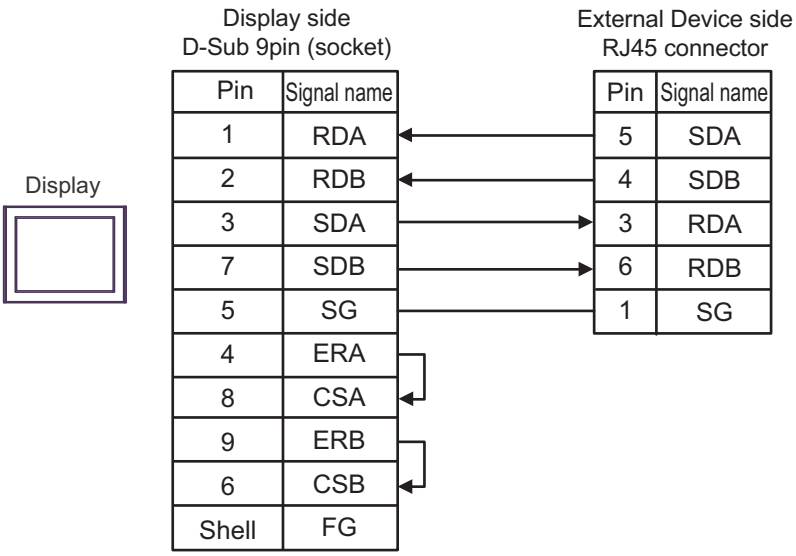

22C)

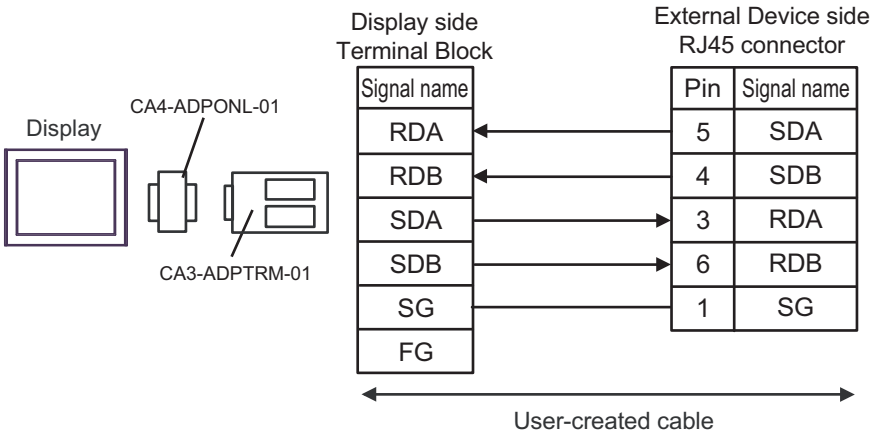
Display side
Terminal Block
External Device side
RJ45 connector
Display
CA4-ADPONL-01
CA3-ADPTRM-01
Signal name
RDA
RDB
SDA
SDB
SG
FG
Pin
Signal name
5 SDA
4 SDB
3 RDA
6 RDB
1 SG
User-created cable

22D)

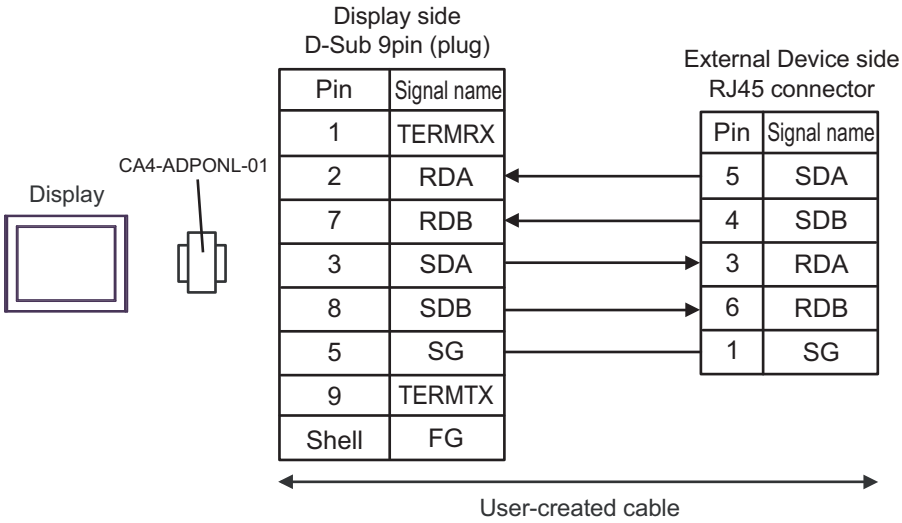
Display side
D-Sub 9pin (plug)
External Device side
RJ45 connector
Display
CA4-ADPONL-01
Pin
Signal name
1 TERMRX
2 RDA
7 RDB
3 SDA
8 SDB
5 SG
9 TERMTX
Shell FG
Pin
Signal name
5 SDA
4 SDB
3 RDA
6 RDB
1 SG
User-created cable

22E)

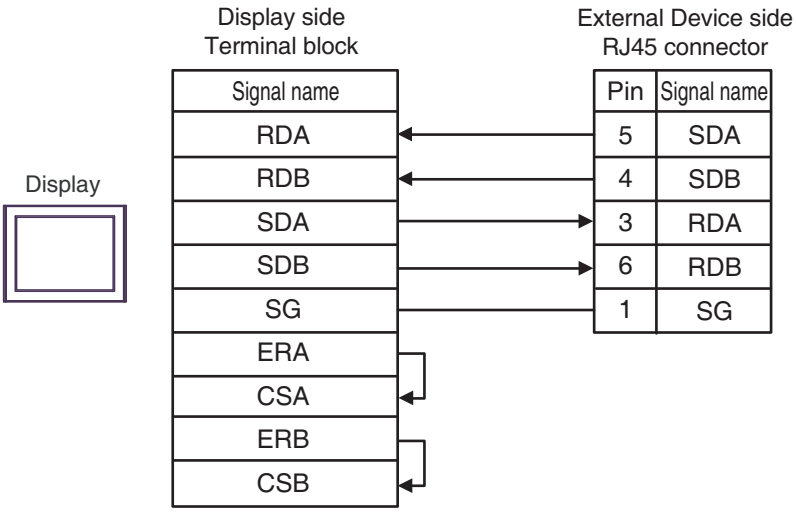
Display side
Terminal block
External Device side
RJ45 connector
Display
Signal name
RDA
RDB
SDA
SDB
SG
ERA
CSA
ERB
CSB
Pin
Signal name
5 SDA
4 SDB
3 RDA
6 RDB
1 SG

22F)

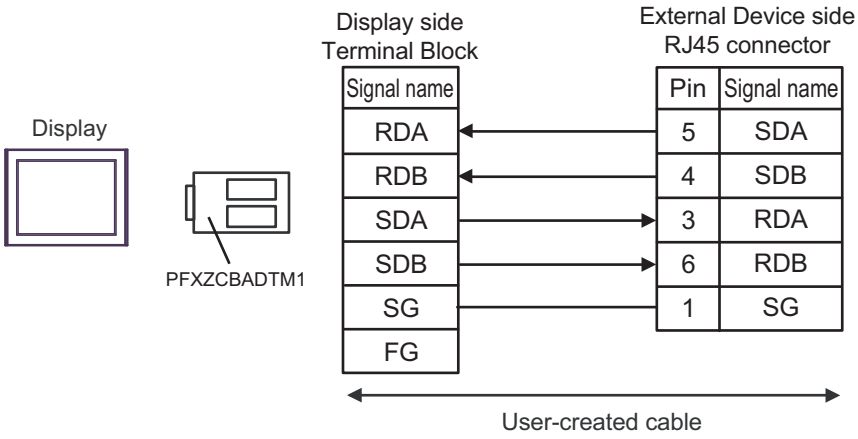
Display side
Terminal Block
External Device side
RJ45 connector
Display
PFXZCBADTM1
Signal name
RDA
RDB
SDA
SDB
SG
FG
Pin
Signal name
5
SDA
4
SDB
3
RDA
6
RDB
1
SG
User-created cable

22G)

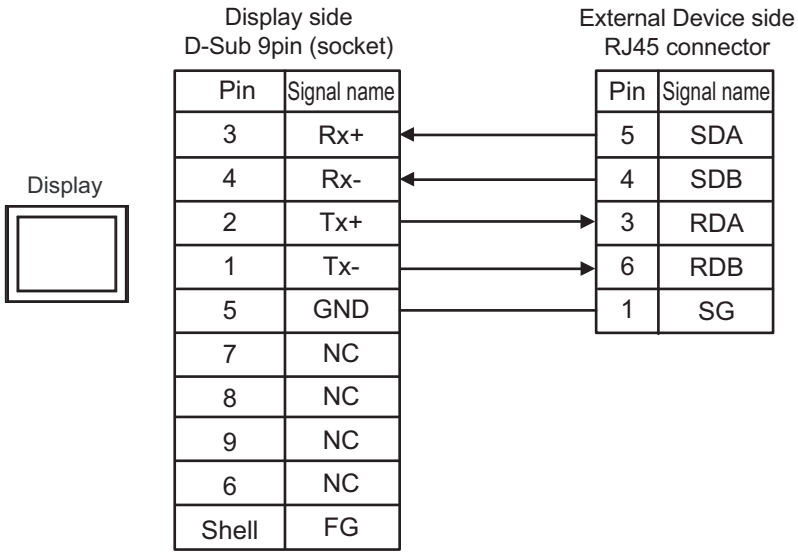
Display side
D-Sub 9pin (socket)
External Device side
RJ45 connector
Display
Pin
Signal name
3
Rx+
4
Rx-
2
Tx+
1
Tx-
5
GND
7
NC
8
NC
9
NC
6
NC
Shell
FG
Pin
Signal name
5
SDA
4
SDB
3
RDA
6
RDB
1
SG

6.23 Cable Diagram 23

Display (Connection Port)	Cable		Notes
GP3000[*1] (COM1) AGP-3302B (COM2) GP-4*01TM (COM1) GP-Rear Module (COM1) ST3000[*2] (COM2) LT3000 (COM1)	23A	COM port conversion adapter by Pro-face CA3-ADPCOM-01 + Terminal block conversion adapter by Pro-face CA3-ADPTRM-01 + User-created cable	The cable length must be 500m or less.
	23B	User-created cable	
GP3000[*3] (COM2)	23C	Online adapter by Pro-face CA4-ADPONL-01 + Terminal block conversion adapter by Pro-face CA3-ADPTRM-01 + User-created cable	The cable length must be 500m or less.
	23D	Online adapter by Pro-face CA4-ADPONL-01 + User-created cable	
IPC[*4]	23E	COM port conversion adapter by Pro-face CA3-ADPCOM-01 + Terminal block conversion adapter by Pro-face CA3-ADPTRM-01 + User-created cable	The cable length must be 500m or less.
	23F	User-created cable	
GP-4106 (COM1) GP-4116T (COM1)	23G	User-created cable	The cable length must be 500m or less.
GP-4107 (COM1) GP-4*03T[*5] (COM2) GP-4203T (COM1)	23H	User-created cable	The cable length must be 500m or less.
GP4000[*6] (COM2) GP-4201T (COM1) GP6000 (COM2) SP5000 (COM1/2)[*7] (COM1/2) SP-5B00 (COM2) ST6000[*8] (COM2) ST-6200 (COM1) STM6000 (COM1) STC6000 (COM1) PS6000 (Basic Box) (COM1/2)	23I	RS-422 Terminal Block Conversion Adapter by Pro-face PFXZCBADTM1[*9] + User-created cable	The cable length must be 500m or less.
	23B	User-created cable	

Display (Connection Port)	Cable		Notes
LT-4*01TM (COM1) LT-Rear Module (COM1)	23J	RJ45 RS-485 Cable (5m) by Pro-face PFXZLMCBRJR81	The cable length must be 200m or less.
PE-4000B*10 PS5000*10 PS6000 (Optional Interface)*10	23K	User-created cable	The cable length must be 500m or less.

*1 All GP3000 models except AGP-3302B

*2 Except AST-3211A and AST-3302B

*3 All GP3000 models except GP-3200 series and AGP-3302B

*4 Only the COM port which can communicate by RS-422/485 (2 wire) can be used. (Except PE-4000B, PS5000, and PS6000)
☞ ■ IPC COM Port (page 9)

*5 Except GP-4203T

*6 All GP4000 models except GP-4100 Series, GP-4*01TM, GP-Rear Module, GP-4201T and GP-4*03T

*7 Except SP-5B00

*8 Except ST-6200

*9 When using a Terminal Block Conversion Adapter (CA3-ADPTRM-01) instead of the RS-422 Terminal Block Conversion Adapter, refer to Cable Diagram 23A.

*10 Only the COM port which can communicate by RS-422/485 (2 wire) can be used.
☞ ■ IPC COM Port (page 9)

23A)

- 1:1 Connection

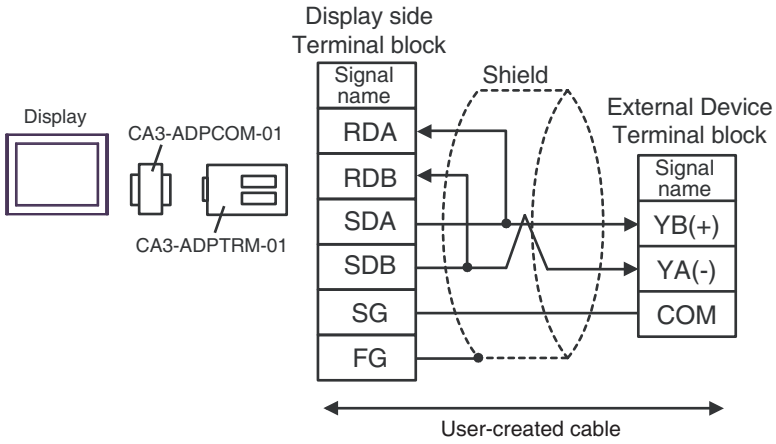

- 1:n Connection

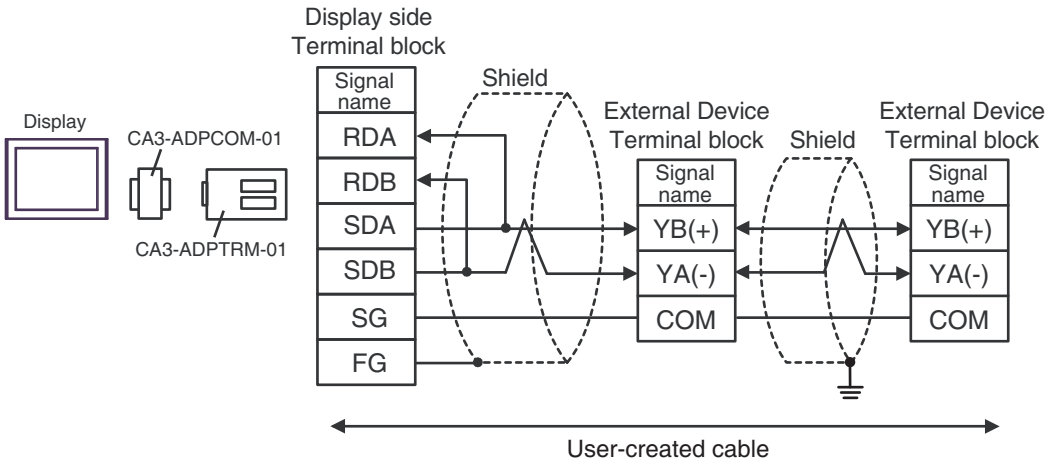

23B)

- 1:1 Connection

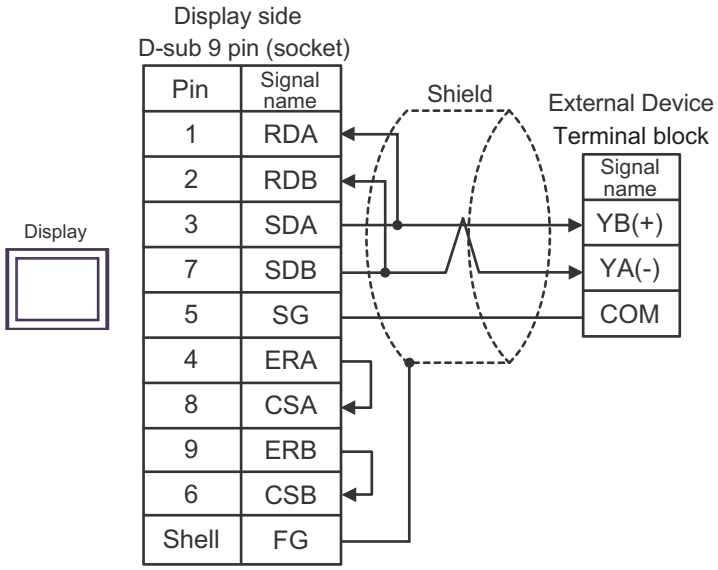

- 1:n Connection

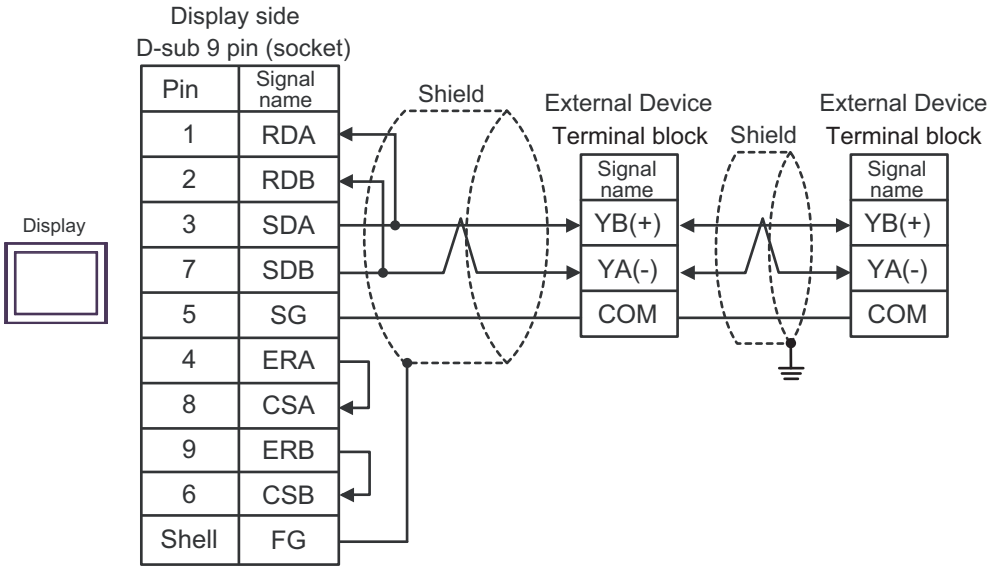

23C)

- 1:1 Connection

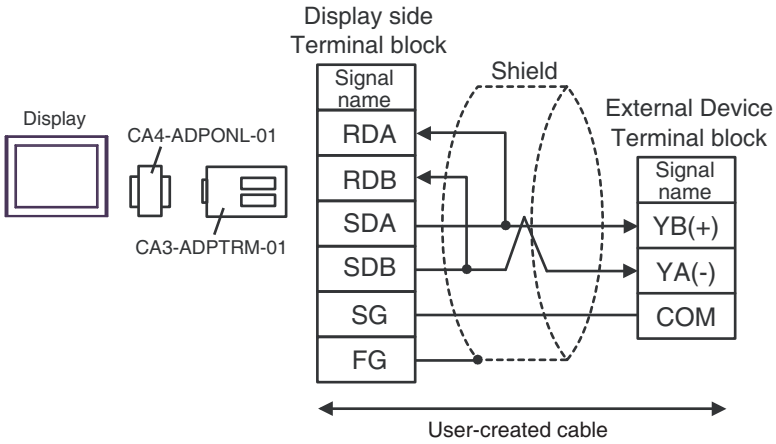

- 1:n Connection

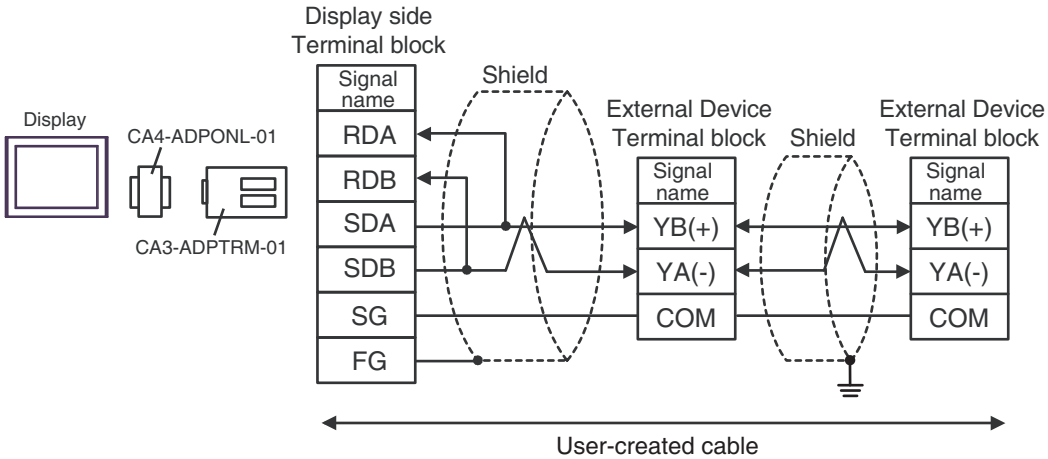

23D)

- 1:1 Connection

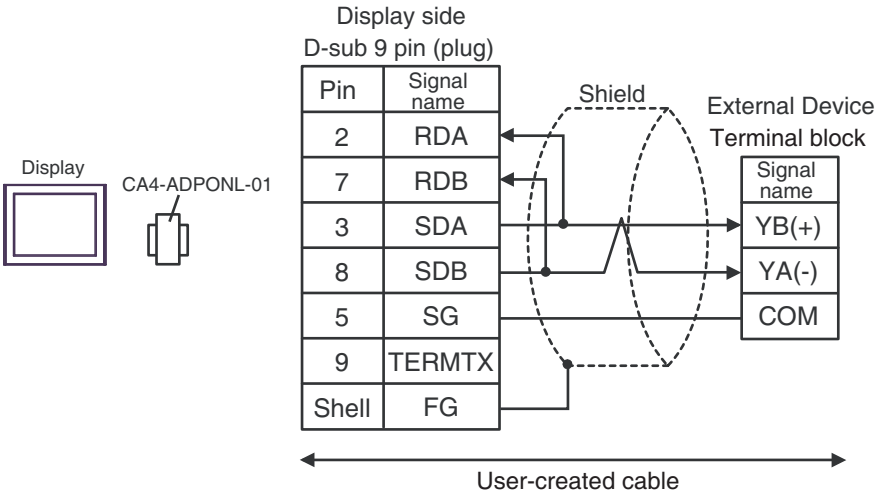

- 1:n Connection

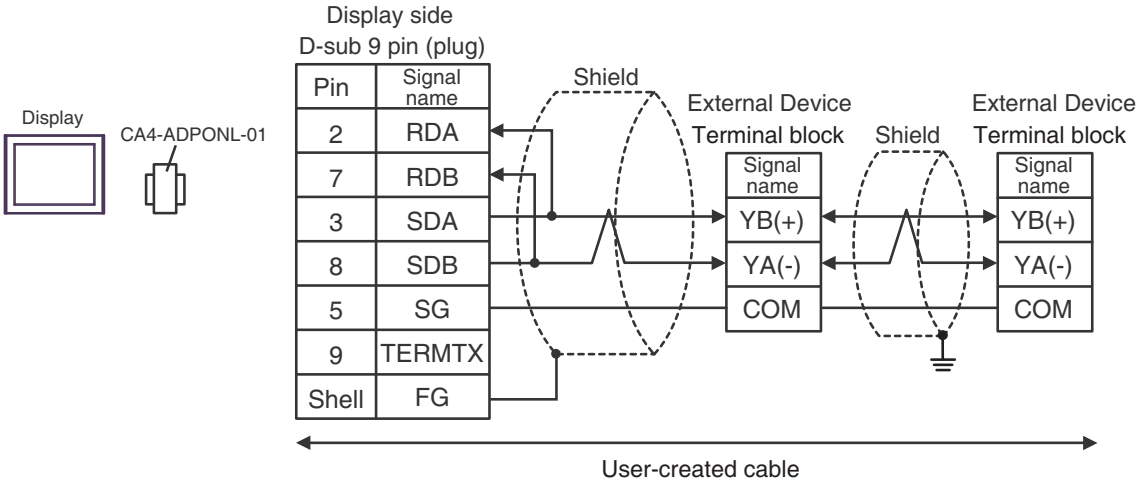

23E)

- 1:1 Connection

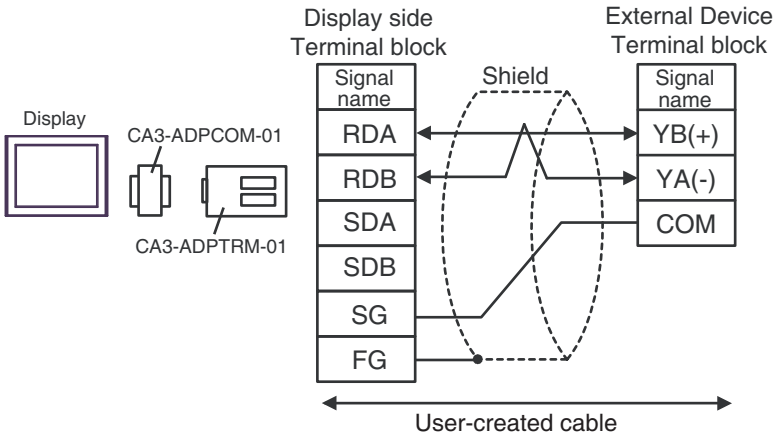

- 1:n Connection

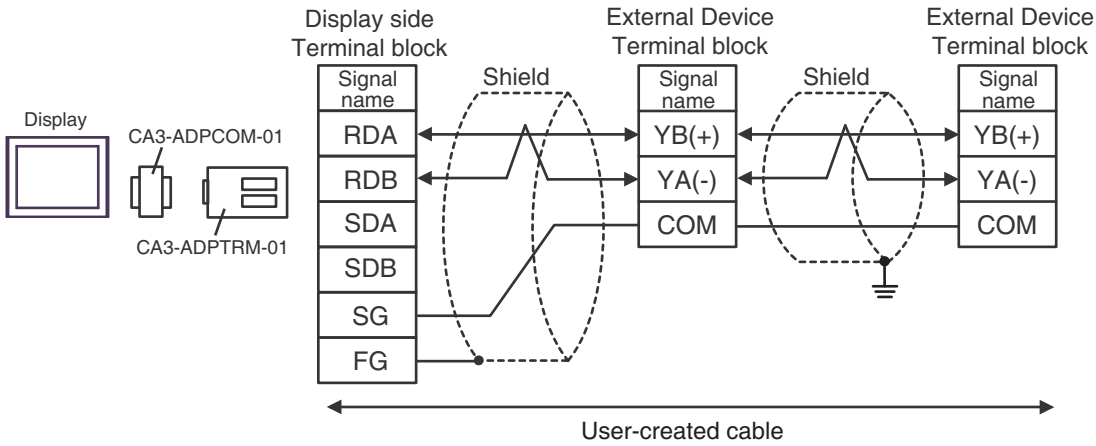

23F)

- 1:1 Connection

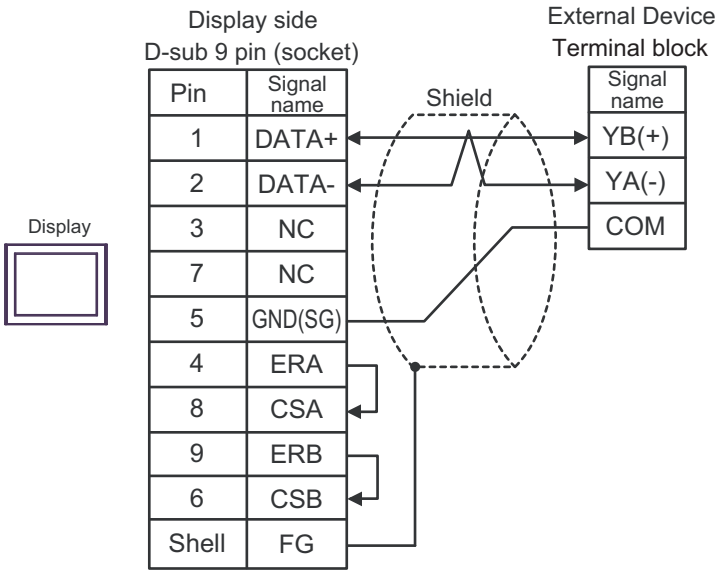

- 1:n Connection

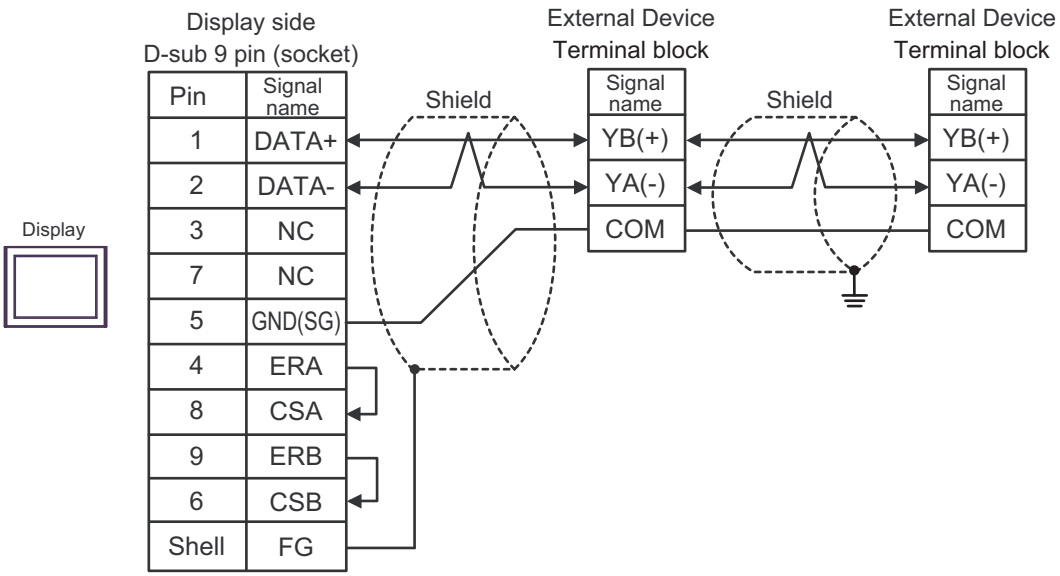

23G)

- 1:1 Connection

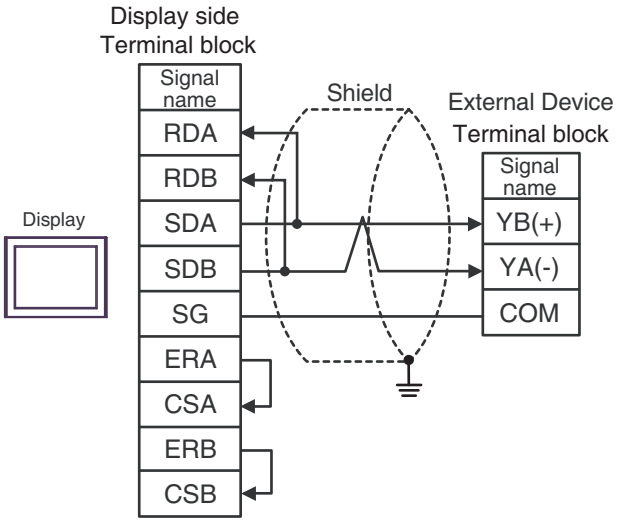

- 1:n Connection

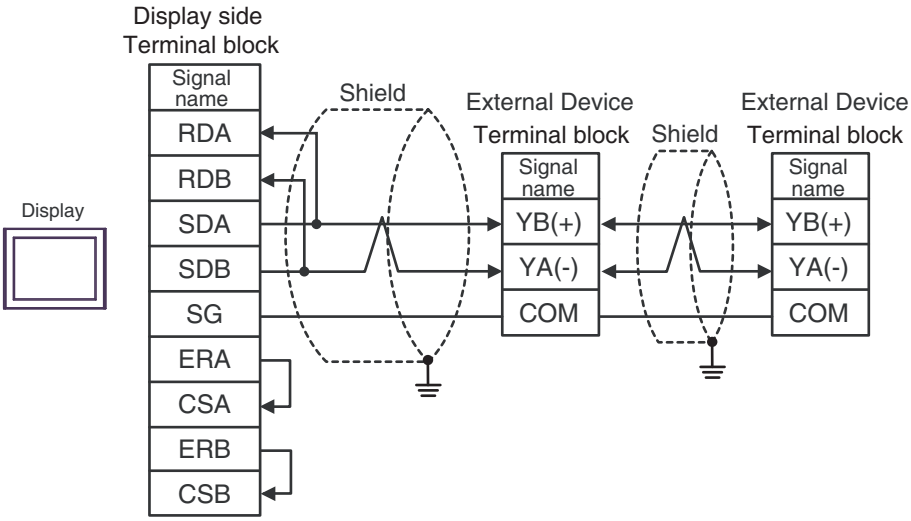

23H)

- 1:1 Connection

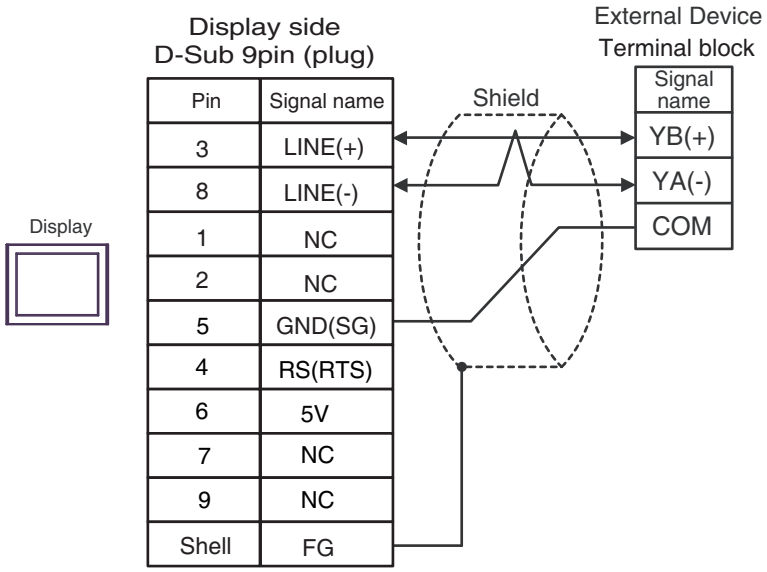

- 1:n Connection

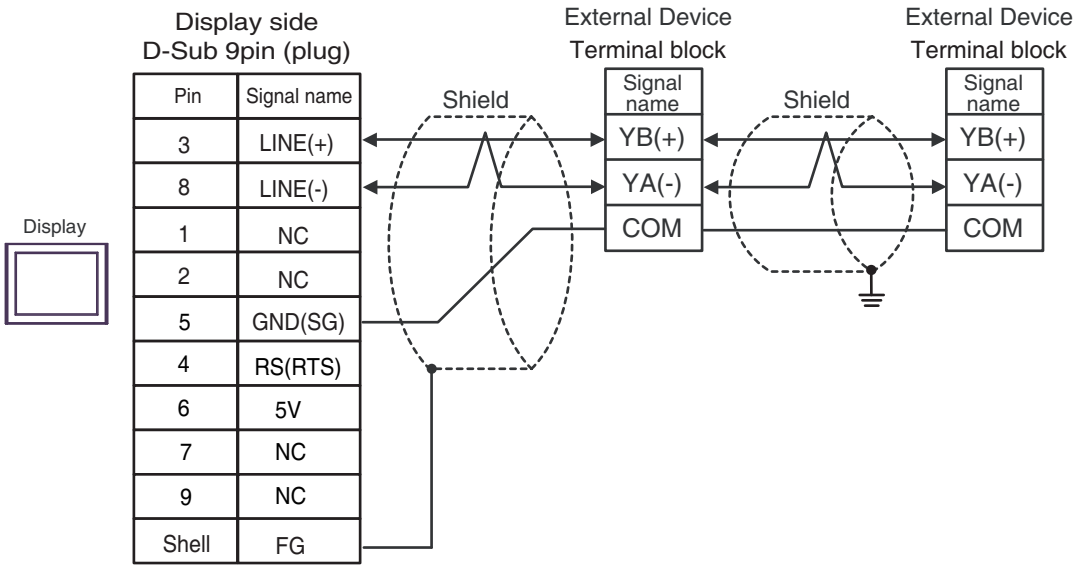

IMPORTANT

- The 5V output (Pin #6) on the Display is the power for the Siemens AG's PROFIBUS connector. Do not use it for other devices.

NOTE

- In COM on the GP-4107, the SG and FG terminals are isolated.

23I)

- 1:1 Connection

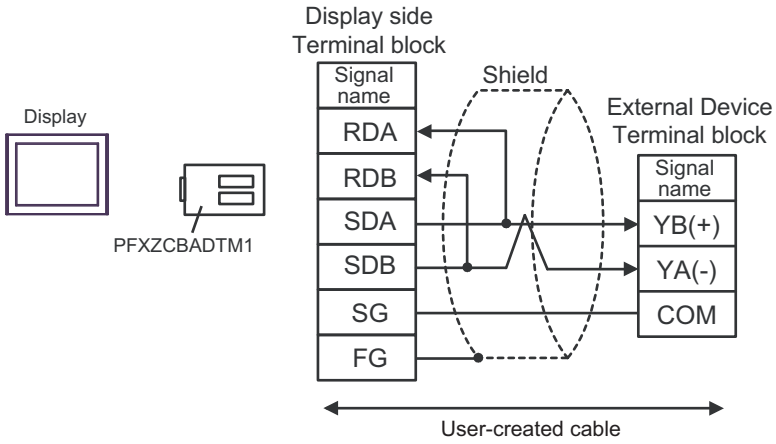

- 1:n Connection

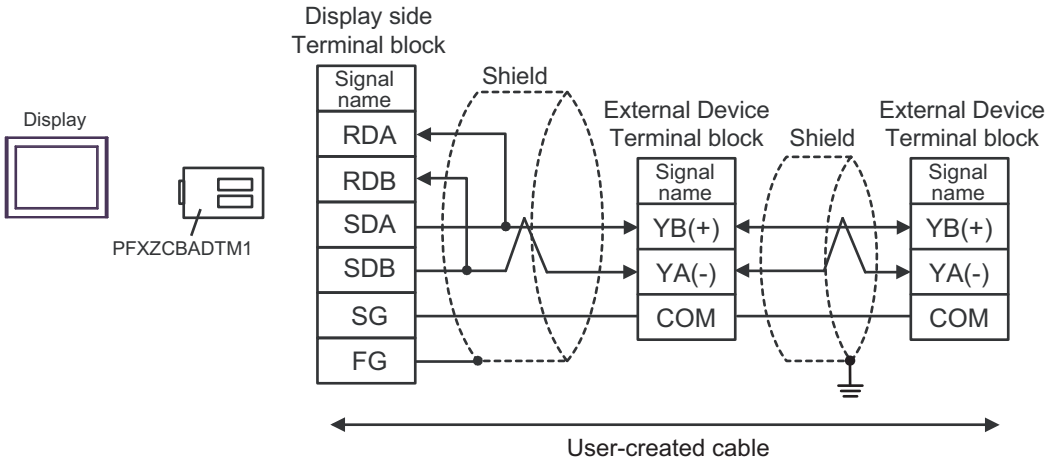

23J)

- 1:1 Connection

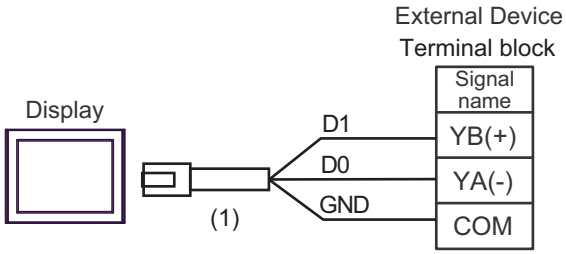

- 1:n Connection

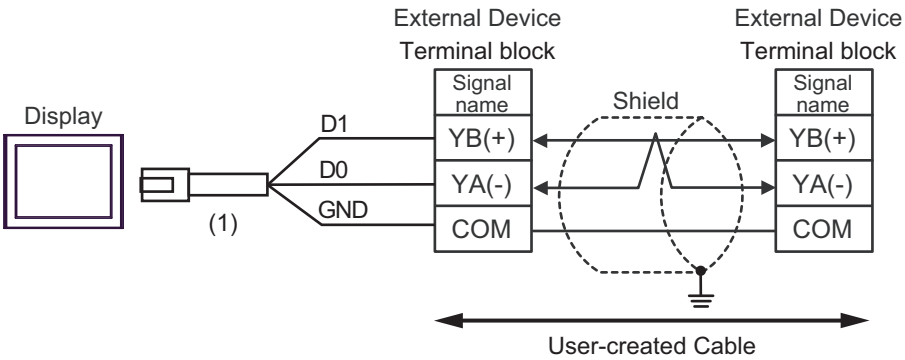

Number	Name	Notes
(1)	RJ45 RS-485 Cable (5m) by Pro-face PFXZLMCBRJR81	

23K)

- 1:1 Connection

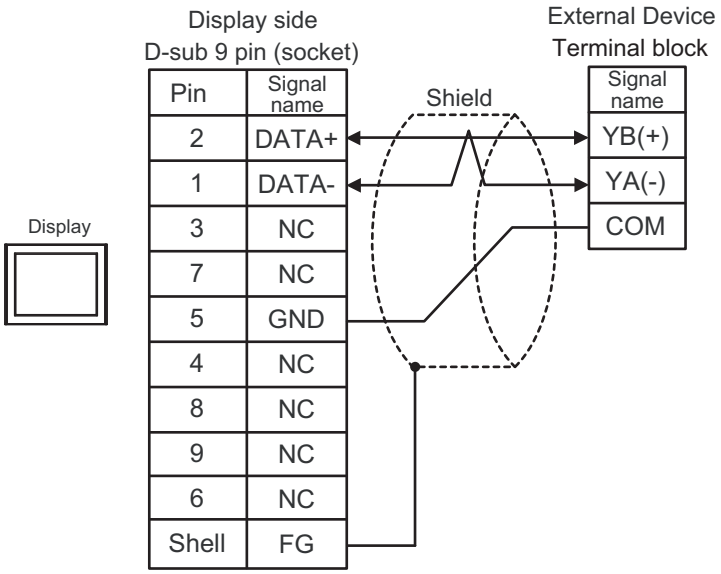

- 1:n Connection

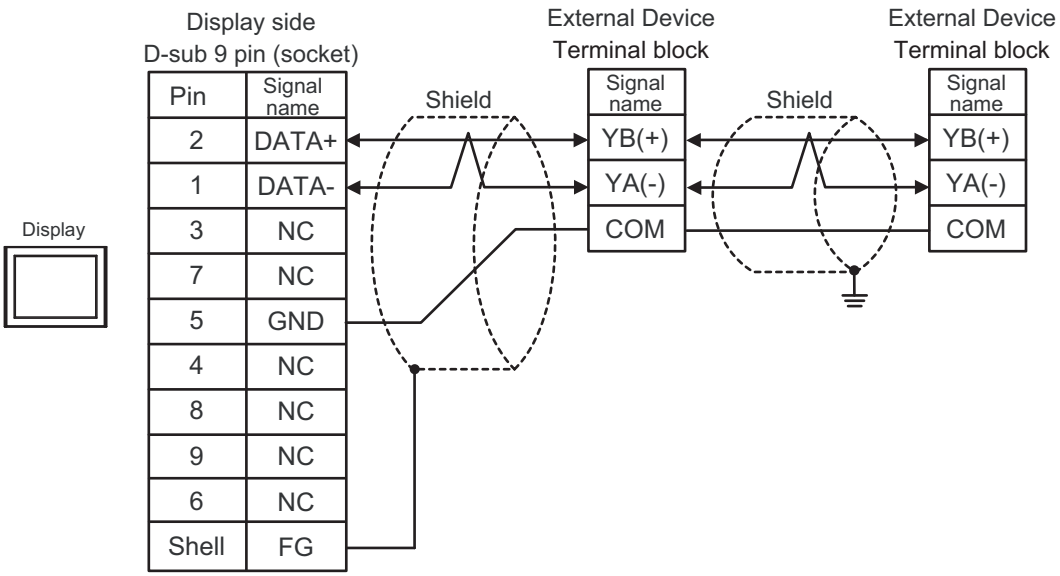

6.24 Cable Diagram 24

Display (Connection Port)	Cable		Notes
GP3000[*1] (COM1) AGP-3302B (COM2) GP-4*01TM (COM1) GP-Rear Module (COM1) ST3000[*2] (COM2) LT3000 (COM1)	24A	COM port conversion adapter by Pro-face CA3-ADPCOM-01 + Terminal block conversion adapter by Pro-face CA3-ADPTRM-01 + User-created cable	The cable length must be 500m or less.
	24B	User-created cable	
GP3000[*3] (COM2)	24C	Online adapter by Pro-face CA4-ADPONL-01 + Terminal block conversion adapter by Pro-face CA3-ADPTRM-01 + User-created cable	The cable length must be 500m or less.
	24D	Online adapter by Pro-face CA4-ADPONL-01 + User-created cable	
IPC[*4]	24E	COM port conversion adapter by Pro-face CA3-ADPCOM-01 + Terminal block conversion adapter by Pro-face CA3-ADPTRM-01 + User-created cable	The cable length must be 500m or less.
	24F	User-created cable	
GP-4106 (COM1) GP-4116T (COM1)	24G	User-created cable	The cable length must be 500m or less.
GP-4107 (COM1) GP-4*03T[*5] (COM2) GP-4203T (COM1)	24H	User-created cable	The cable length must be 500m or less.
GP4000[*6] (COM2) GP-4201T (COM1) GP6000 (COM2) SP5000 (COM1/2)[*7] (COM1/2) SP-5B00 (COM2) ST6000[*8] (COM2) ST-6200 (COM1) STM6000 (COM1) STC6000 (COM1) PS6000 (Basic Box) (COM1/2)	24I	RS-422 Terminal Block Conversion Adapter by Pro-face PFXZCBADTM1[*9] + User-created cable	The cable length must be 500m or less.
	24B	User-created cable	

Display (Connection Port)	Cable		Notes
LT-4*01TM (COM1) LT-Rear Module (COM1)	24J	RJ45 RS-485 Cable (5m) by Pro-face PFXZLMCBRJR81	The cable length must be 200m or less.
PE-4000B*10 PS5000*10 PS6000 (Optional Interface)*10	24K	User-created cable	The cable length must be 500m or less.

*1 All GP3000 models except AGP-3302B

*2 Except AST-3211A and AST-3302B

*3 All GP3000 models except GP-3200 series and AGP-3302B

*4 Only the COM port which can communicate by RS-422/485 (2 wire) can be used. (Except PE-4000B, PS5000, and PS6000)
☞ ■ IPC COM Port (page 9)

*5 Except GP-4203T

*6 All GP4000 models except GP-4100 Series, GP-4*01TM, GP-Rear Module, GP-4201T and GP-4*03T

*7 Except SP-5B00

*8 Except ST-6200

*9 When using a Terminal Block Conversion Adapter (CA3-ADPTRM-01) instead of the RS-422 Terminal Block Conversion Adapter, refer to Cable Diagram 24A.

*10 Only the COM port which can communicate by RS-422/485 (2 wire) can be used.
☞ ■ IPC COM Port (page 9)

24A)

- 1:1 Connection

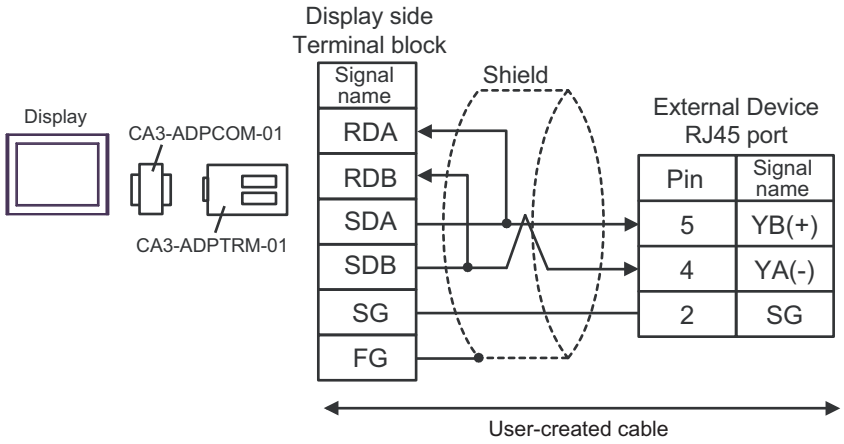

- 1:n Connection

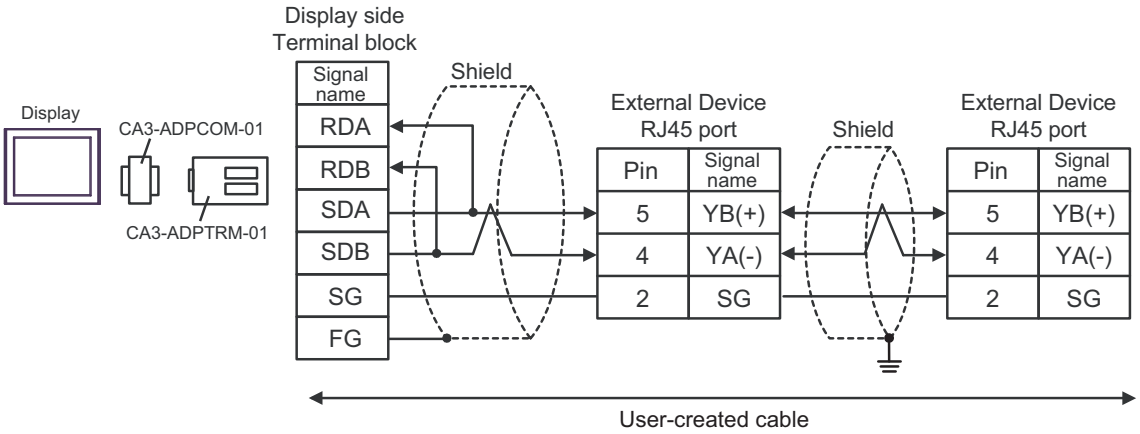

24B)

- 1:1 Connection

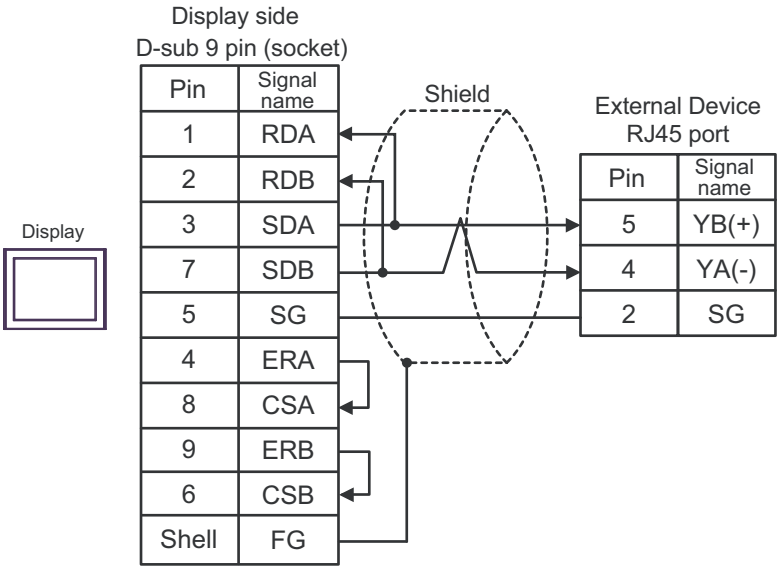

- 1:n Connection

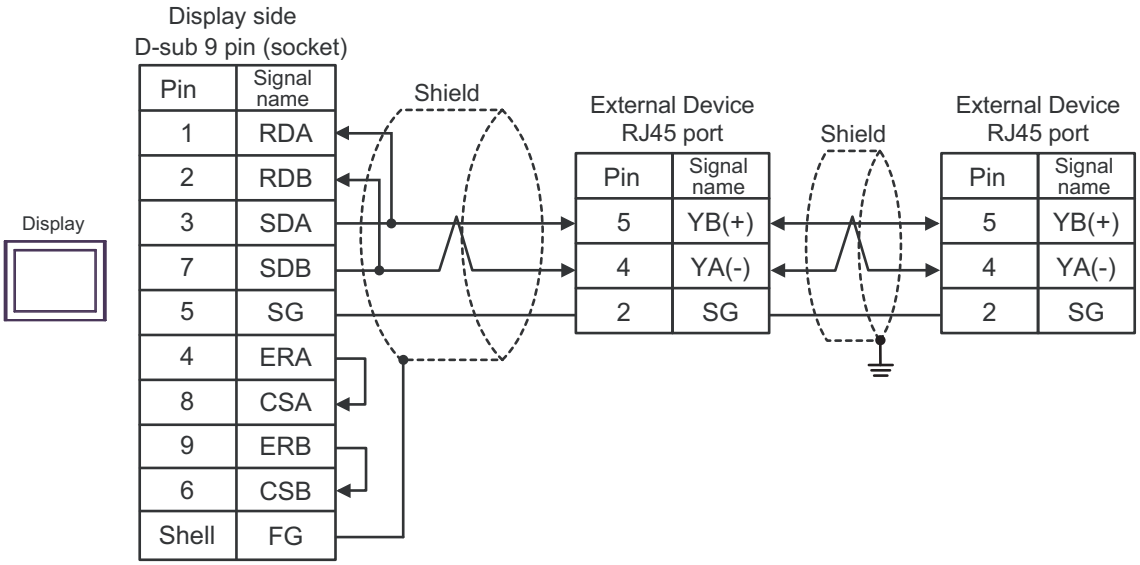

24C)

- 1:1 Connection

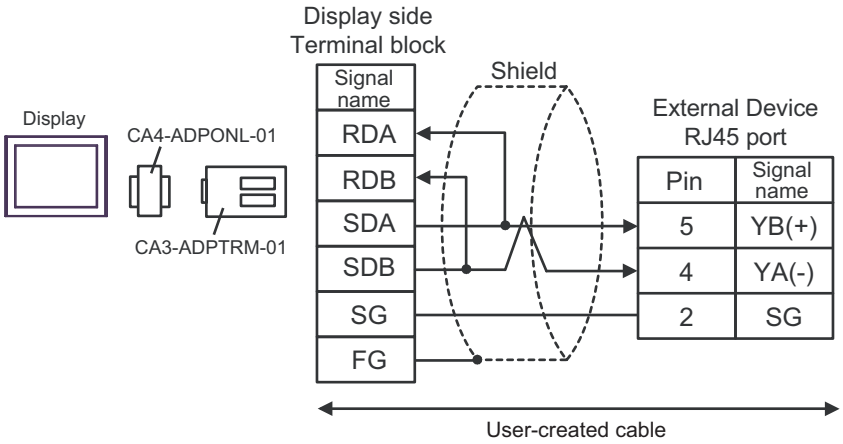

- 1:n Connection

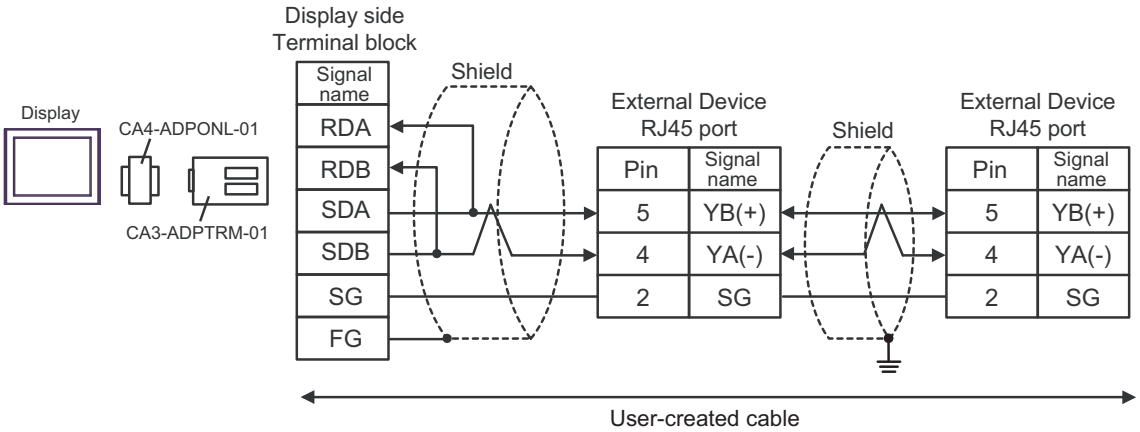

24D)

- 1:1 Connection

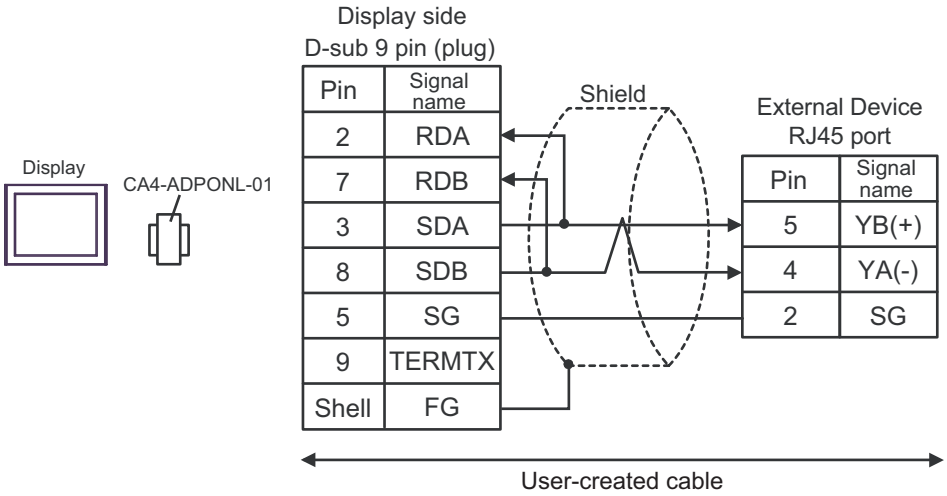

- 1:n Connection

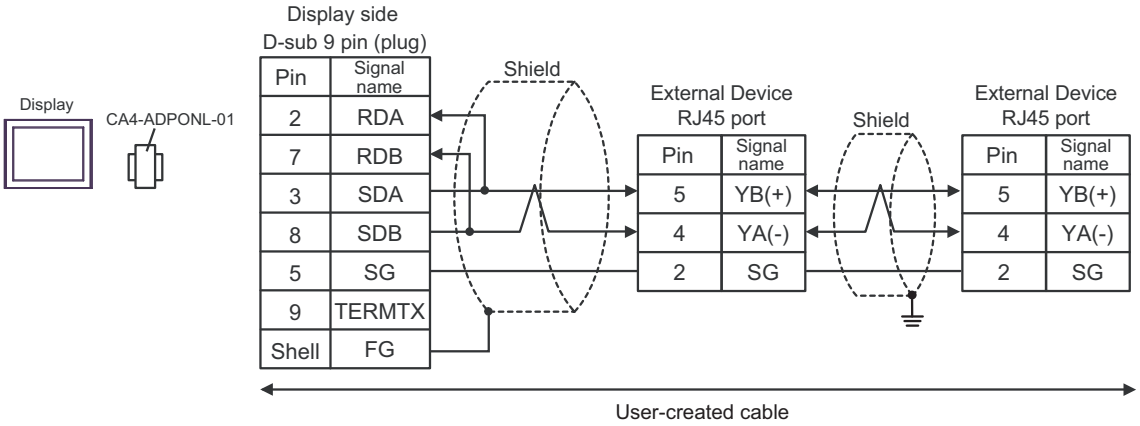

24E)

- 1:1 Connection

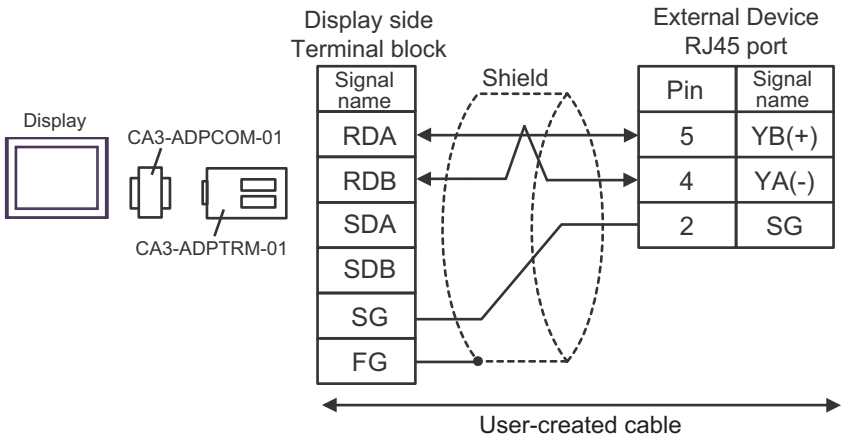

- 1:n Connection

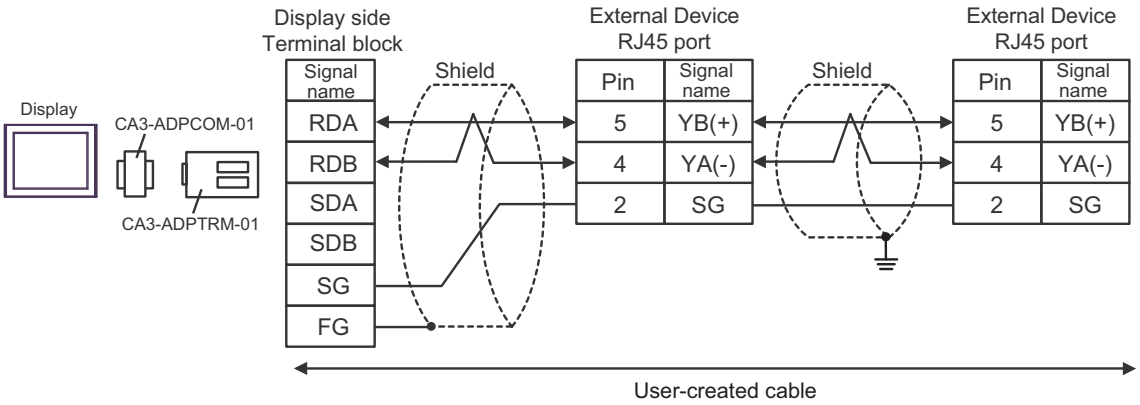

24F)

- 1:1 Connection

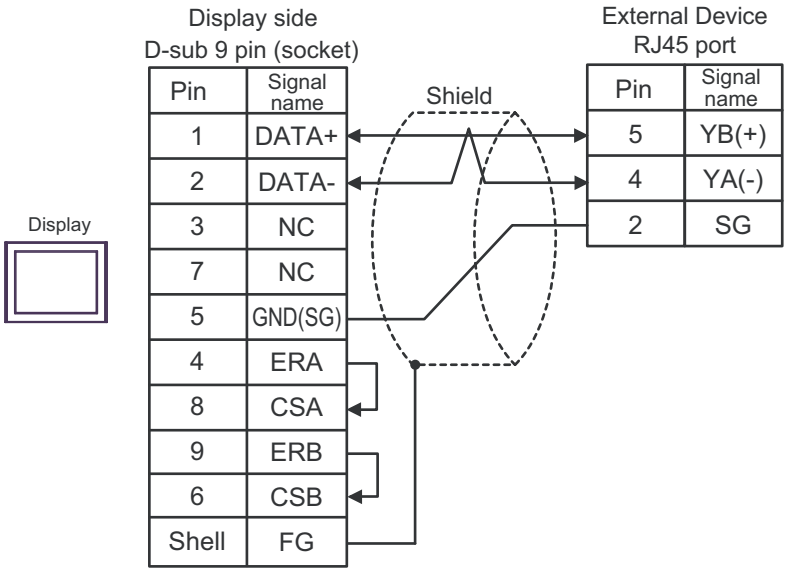

- 1:n Connection

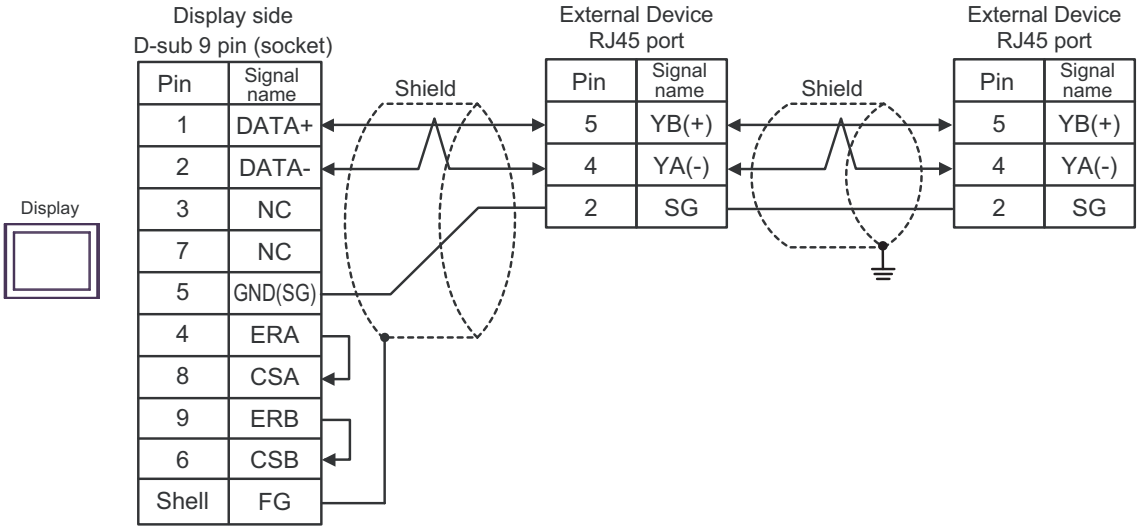

24G)

- 1:1 Connection

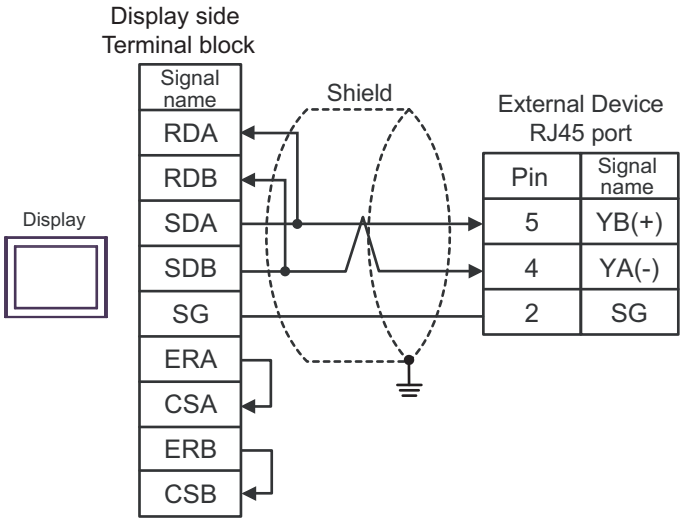

- 1:n Connection

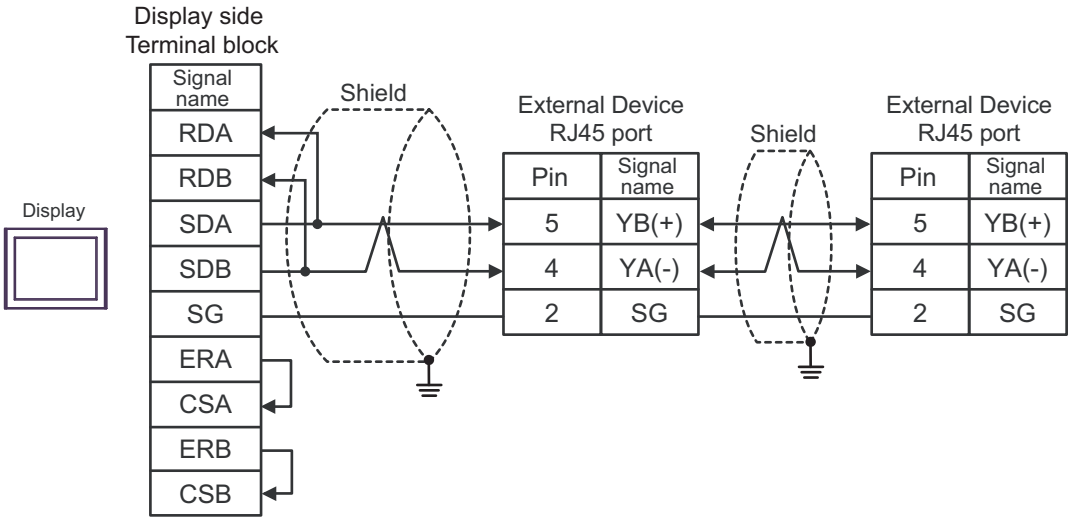

24H)

- 1:1 Connection

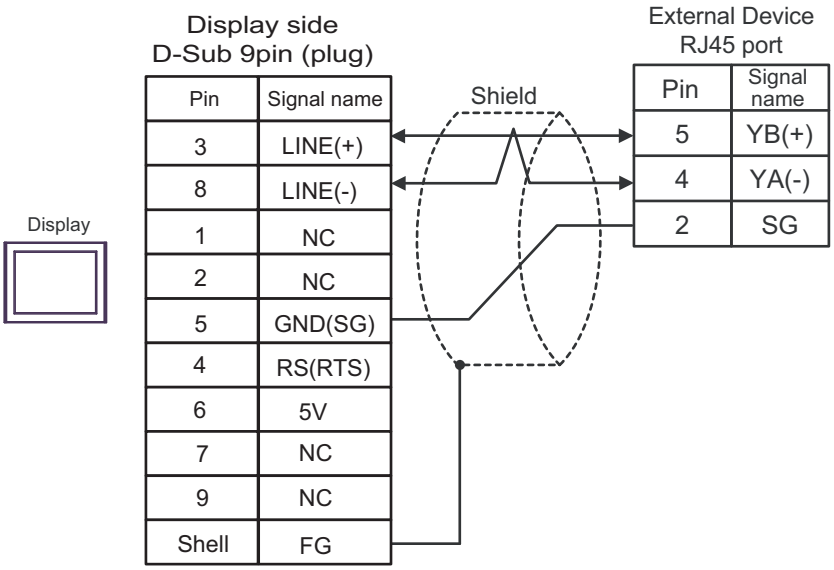

- 1:n Connection

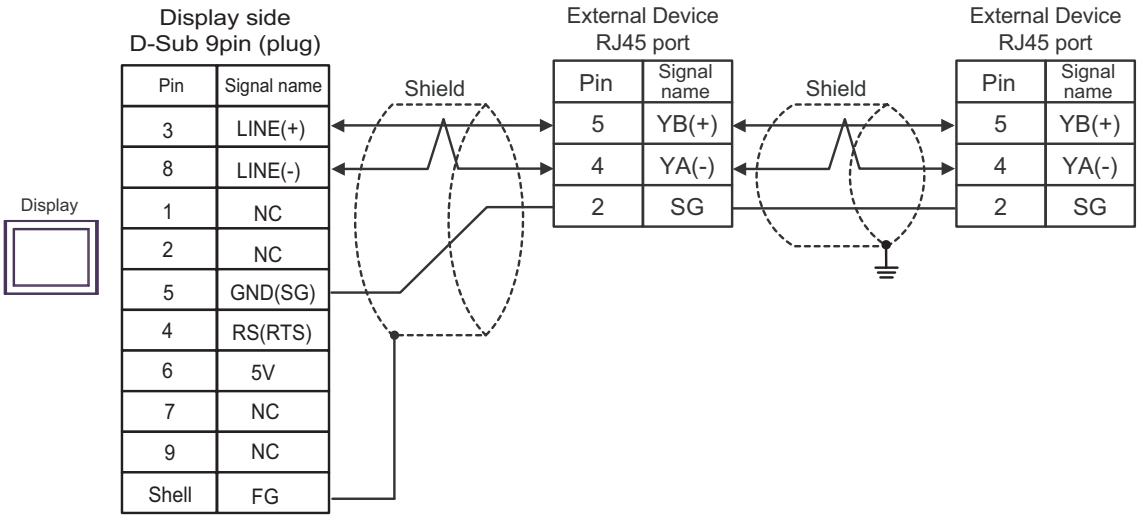

IMPORTANT

- The 5V output (Pin #6) on the Display is the power for the Siemens AG's PROFIBUS connector. Do not use it for other devices.

NOTE

- In COM on the GP-4107, the SG and FG terminals are isolated.

24I)

- 1:1 Connection

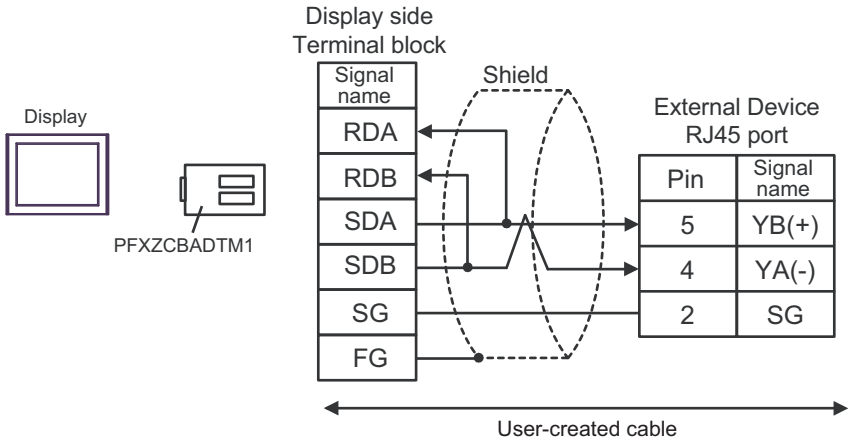

- 1:n Connection

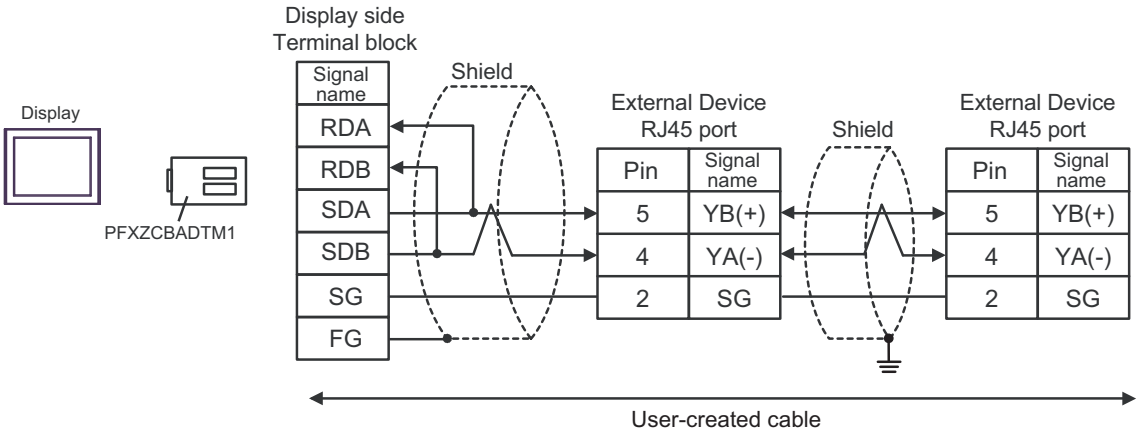

24J)

- 1:1 Connection

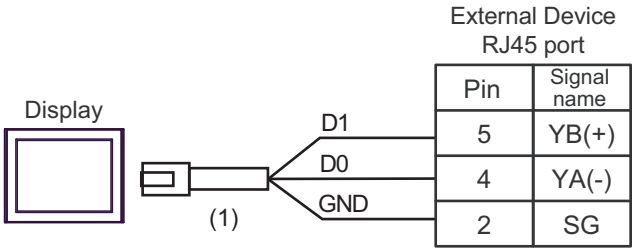

- 1:n Connection

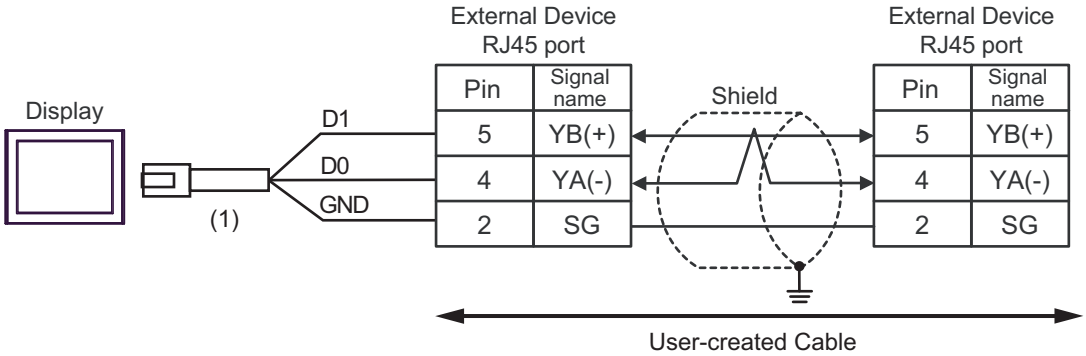

Number	Name	Notes
(1)	RJ45 RS-485 Cable (5m) by Pro-face PFXZLMCBRJR81	

24K)

- 1:1 Connection

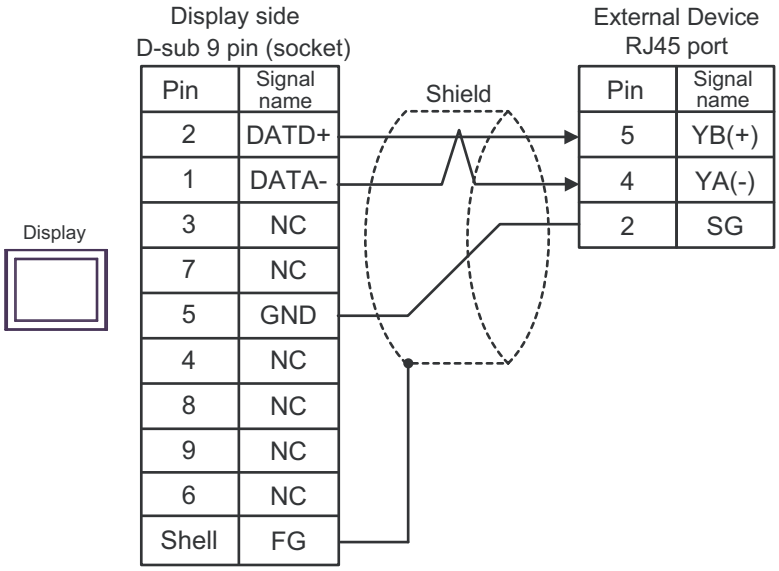

- 1:n Connection

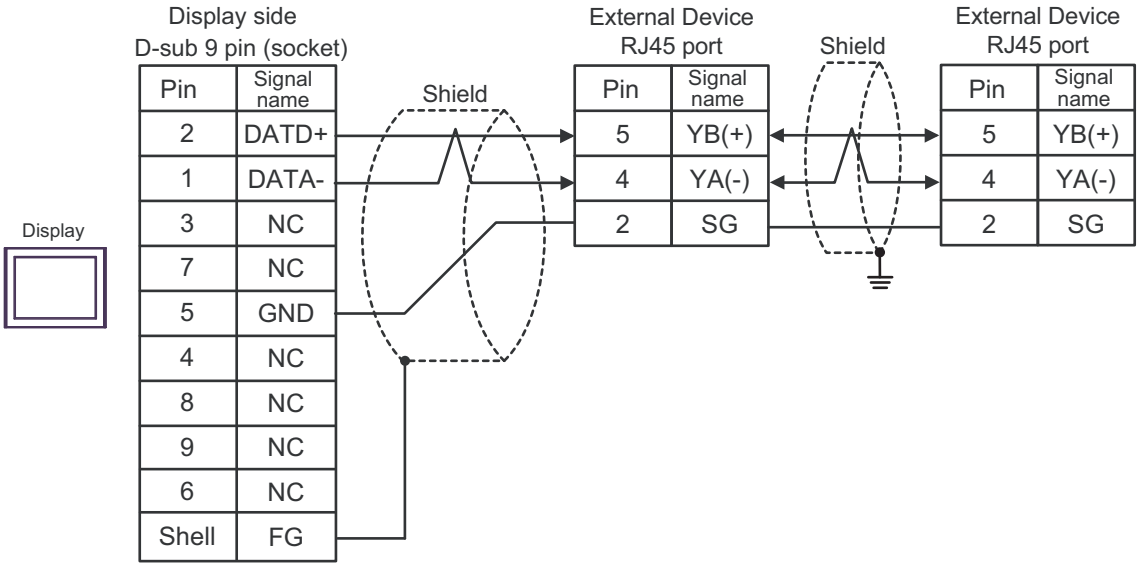

7 Supported Device

Range of supported device address is shown in the table below. Please note that the actually supported range of the devices varies depending on the External Device to be used. Please check the actual range in the manual of your External Device.

7.1 MODBUS Series

: This address can be specified as system data area.

Device	Bit Address	Word Address	32 bits	Remarks
Coil	000001 - 065536	000001 - 065521	L / H or H / L *1	16+1
Discrete Input	100001 - 165536	100001 - 165521		16+1 *2
Input Register	-----	300001 - 365536		Bit 15 *2
Holding Register	400001,00 - 465536,15	400001 - 465536		Bit 15 *3
Input Register	-----	D300001 - D365535		Bit 31 *2
Holding Register	D400001,00 - D465535,31	D400001 - D465535		Bit 31 *4

*1 Whether the data is stored as higher or lower is determined by the [Double Word word order] setting in [Device Setting].
☞"5.1 Setup Items in GP-Pro EX" (page 79)

*2 Write disable.

*3 An access method at the time of Bit Set varies depending on the [Rest of the bits in this word] setting of [Device Setting].

"Clear"..... Bit 15

"Do not clear"..... 400001,00 - 465536,15

*4 An access method at the time of Bit Set varies depending on the [Rest of the bits in this word] setting of [Device Setting].

"Clear"..... Bit 31

"Do not clear"..... D400001,00 - D465535,31

NOTE
- GP-Pro EX simulation does not synchronize the coil bit address and word address values.

■ IEC61131 Syntax Address Description

The following table compares IEC61131 and MODBUS syntax address descriptions.

Device	MODBUS Syntax			IEC61131 Syntax				
				Format	0-based		1-based	
	Format	Range	First element		Range	First element	Range	First element
Coil	000001+i	i = 0 to 65535	000001	%Mi	i = 0 to 65535	%M00000	i = 1 to 65536	%M00001
Discrete Input	100001+i	i = 0 to 65535	100001	-	-	-	-	-
Input Register (Word)	300001+i	i = 0 to 65535	300001	-	-	-	-	-
Input Register (Word bit)	300001+i,j	i = 0 to 65535 j = 0 to 15	300001,00	-	-	-	-	-
Holding Register (Word)	400001+i	i = 0 to 65535	400001	%MWi	i = 0 to 65535	%MW00000	i = 1 to 65536	%MW00001
Holding Register (Word bit)	400001+i,j	i = 0 to 65535 j = 0 to 15	400001,00	%Mwi: Xj	i = 0 to 65535 j=0 to 15	%MW00000 :X00	i = 1 to 65536 j=0 to 15	%MW00001 :X00
Input Register (D Word)	D300001+i	i = 0 to 65534	D300001	-	-	-	-	-
Input Register (D Word bit)	D300001+i,j	i = 0 to 65534 j = 0 to 31	D300001,00	-	-	-	-	-
Holding Register (D Word)	D400001+i	i = 0 to 65534	D400001	%MDi	i = 0 to 65534	%MD00000	i = 1 to 65535	%MD00001
Holding Register (D Word bit)	D400001+i,j	i = 0 to 65534 j = 0 to 31	D400001,00	%MDi:Xj	i = 0 to 65534 j=0 to 31	%MD00000 :X00	i = 1 to 65535 j=0 to 31	%MD00001 :X00

NOTE

- The addresses 100000 and 300000 cannot be accessed using IEC61131 syntax.
- If you apply IEC61131 syntax to a project that has a discrete input or input register already set, the addresses become "-Undefined-" and invalid.

NOTE

- Refer to the GP-Pro EX Reference Manual for system data area.

  Cf. GP-Pro EXReference Manual "LS Area (Direct Access Method Area)"

- Refer to the precautions on manual notation for icons in the table.

  ☞ "Manual Symbols and Terminology"

7.2 MICRO-EHV Series

: This address can be specified as system data area.

Device	Bit Address	Word Address	32 bits	Address notation in External Device	Remarks
Coil	000257 - 000288	000257 - 000273	L / H *1	Y0100 - Y0131	
Discrete Input	100001 - 100047	100001 - 100002		X0000 - X0046	*2
Input Register	-----	300001 - 302048		WM000 - WM7FF	*2
Holding Register	400001.00 - 432768.15	400001 - 432768		WR0000 - WR7FFF	
Input Register	-----	D300001 - D302047		DM000 - DM7FE	*2
Holding Register	D400001.00 - D432767.31	D400001 - D432767		DR0000 - DR7FFE	

*1 Whether the data is stored as higher or lower is determined by the [Double Word word order] setting in [Device Setting]. Set to [Low word first(L/H)].
☞"5.1 Setup Items in GP-Pro EX" (page 79)

*2 Write disable.

NOTE

- GP-Pro EX simulation does not synchronize the coil bit address and word address values.
- Refer to the GP-Pro EX Reference Manual for system data area.

Cf. GP-Pro EXReference Manual "LS Area (Direct Access Method Area)"

- Refer to the precautions on manual notation for icons in the table.

☞ "Manual Symbols and Terminology"

7.3 FX3S Series

: This address can be specified as system data area.

Device	Bit Address	Word Address	32 bits	Address notation in External Device	Remarks
Holding Register	400001,00 - 403000,15	400001 - 403000	L / H *1	D0000 - D2999	
Holding Register	408001,00 - 408512,15	408001 - 408511		D8000 - D8511	
Holding Register	441281,00 - 441418,15	441281 - 441418		TN000 - TN137	
Holding Register	441793,00 - 441824,15	441793 - 441824		CN00 - CN31	
Holding Register	441993,00 - 442104,15	441993 - 442104		CN200 - CN255	
Holding Register	442105,00 - 442200,15	442105 - 442200		M0000 - M1535	
Holding Register	442585,00 - 442616,15	442585 - 442616		M8000 - M8511	
Holding Register	442617,00 - 442632,15	442617 - 442632		S000 - S255	
Holding Register	442873,00 - 442881,15	442873 - 442881		TS000 - TS137	
Holding Register	442905,00 - 442906,15	442905 - 442906		CS00 - CS31	
Holding Register	442917,00 - 442920,15	442917 - 442920		CS200 - CS255	
Holding Register	442921,00 - 442921,15	442921 - 442921		Y00 - Y15	
Input Register	300001,00 - 303000,15	300001 - 303000		D0000 - D2999	
Input Register	308001,00 - 308512,15	308001 - 308511		D8000 - D8511	
Input Register	341281,00 - 341418,15	341281 - 341418		TN000 - TN137	
Input Register	341793,00 - 341824,15	341793 - 341824		CN00 - CN31	
Input Register	341993,00 - 342104,15	341993 - 342104		CN200 - CN255	
Input Register	342105,00 - 342200,15	342105 - 342200		M0000 - M1535	
Input Register	342585,00 - 342616,15	342585 - 342616		M8000 - M8511	
Input Register	342617,00 - 342632,15	342617 - 342632		S000 - S255	

Device	Bit Address	Word Address	32 bits	Address notation in External Device	Remarks
Input Register	342873,00 - 342881,15	342873 - 342881	L / H *1	TS000 - TS137	
Input Register	342905,00 - 342906,15	342905 - 342906		CS00 - CS31	
Input Register	342917,00 - 342920,15	342917 - 342920		CS200 - CS255	
Input Register	342921,00 - 342921,15	342921 - 342921		Y00 - Y15	
Input Register	342937,00 - 342937,15	342937 - 342937		X00 - X17	
Holding Register	D400001,00 - D402999,31	D400001 - D402999		D0000 - D2999(DWord address)	
Holding Register	D408001,00 - D408511,31	D408001 - D408511		D8000 - D8511(DWord address)	
Input Register	D300001,00 - D302999,31	D300001 - D302999		D0000 - D2999(DWord address)	
Input Register	D308001,00 - D308511,31	D308001 - D308511		D8000 - D8511(DWord address)	
Coil	000001 - 001536	000001 - 001521		M0000 - M1535	
Coil	007681 - 008192	007681 - 008177		M8000 - M8511	
Coil	008193 - 008448	008193 - 008433		S000 - S255	
Coil	012801 - 012833	012801 - 012817		C00 - C31	
Coil	012289 - 012426	012289 - 012411		T000 - T137	
Coil	013001 - 013056	013001 - 013033		C200 - C255	
Coil	013057 - 013070	13057		Y000 - Y015	
Discrete Input	100001 - 101536	100001 - 101521		M0000 - M1535	
Discrete Input	107681 - 108192	107681 - 108177		M8000 - M8511	
Discrete Input	108193 - 108448	108193 - 108433		S000 - S255	
Discrete Input	012801 - 012833	012801 - 012817		C00 - C31	
Discrete Input	112289 - 112426	112801 - 112832		T000 - T137	
Discrete Input	113001 - 113056	112801 - 112817		C200 - C255	
Discrete Input	113057 - 113070	113057		Y000 - Y015	
Discrete Input	113313 - 113328	113313		X000 - X017	

*1 Whether the data is stored as higher or lower is determined by the [Double Word word order] setting in [Device Setting]. Set to [Low word first(L/H)].
☞ "5.1 Setup Items in GP-Pro EX" (page 79)

NOTE

- GP-Pro EX simulation does not synchronize the coil bit address and word address values.
- Refer to the GP-Pro EX Reference Manual for system data area.

Cf. GP-Pro EXReference Manual "LS Area (Direct Access Method Area)"

- Refer to the precautions on manual notation for icons in the table.

☞ "Manual Symbols and Terminology"

7.4 MSEP-LC

: This address can be specified as system data area.

Device	Bit Address	Word Address	32 bits	Address notation in External Device	Remarks
Holding Register	405137.00 - 405200.15	405137 - 405200	L / H *1	D0000 - D0063	
Holding Register	405265.00 - 405296.15	405265 - 405296		SD0000 - SD0031	*2
Holding Register	404097.00 - 404098.15	404097 - 404098		IX0000 - IX0001	
Holding Register	404129.00 - 404132.15	404129 - 404132		X0000 - X003F	*2
Coil	004097 - 004160	004097 - 004145			
Holding Register	404161.00 - 404164.15	404161 - 404164		Y0000 - Y003F	*2
Coil	004609 - 004672	004609 - 004657			
Holding Register	404353.00 - 404544.15	404353 - 404544		M0000 - M3071	
Coil	007681 - 010752	007681 - 010737			
Holding Register	404865.00 - 404872.15	404865 - 404872		SM0000 - SM0127	*2
Coil	015873 - 016000	015873 - 015985			
Holding Register	404881.00 - 404882.15	404881 - 404882		TS0000 - TS0031	*2
Coil	016129 - 016160	016129 - 016145			
Holding Register	404945.00 - 404946.15	404945 - 404946		TC0000 - TC0031	*2
Coil	017153 - 017184	017153 - 017169			
Holding Register	405329 - 405360	405329 - 405360		TV0000 - TV0031	*2
Holding Register	405393 - 405424	405393 - 405424		TP0000 - TP0031	*2
Holding Register	405009.00 - 405010.15	405009 - 405010		CS0000 - CS0031	*2
Coil	018177 - 018208	018177 - 018193			
Holding Register	405073.00 - 405074.15	405073 - 405074		CC0000 - CC0031	*2
Coil	019201 - 019232	019201 - 019217			
Holding Register	405521.00 - 405552.15	405521 - 405552		CV0000 - CV0031	*2
Holding Register	405457.00 - 405488.15	405457 - 405488		CP0000 - CP0031	*2

*1 Whether the data is stored as higher or lower is determined by the [Double Word word order] setting in [Device Setting]. Set to [Low word first(L/H)].
☞"5.1 Setup Items in GP-Pro EX" (page 79)

*2 Write disable.

NOTE

- GP-Pro EX simulation does not synchronize the coil bit address and word address values.
- Refer to the GP-Pro EX Reference Manual for system data area.

Cf. GP-Pro EXReference Manual "LS Area (Direct Access Method Area)"

- Refer to the precautions on manual notation for icons in the table.

☞ "Manual Symbols and Terminology"

7.5 RCON Series

: This address can be specified as system data area.

Device	Bit Address	Word Address	32 bits	Remarks
Device0: Coil	000001 - 065536	000001 - 065521	H / L	÷16+1
Device1: Discrete Input	100001 - 165536	100001 - 165521		÷16+1 *1
Device3: Input register	-----	300001 - 365536		Bit 15 *1
Device4: Holding register	400001.00 - 465536.15	400001 - 465536		

*1 Write disable.

NOTE

- GP-Pro EX simulation does not synchronize the coil bit address and word address values.
- Refer to the GP-Pro EX Reference Manual for system data area.

Cf. GP-Pro EXReference Manual "LS Area (Direct Access Method Area)"

- Refer to the precautions on manual notation for icons in the table.

☞ "Manual Symbols and Terminology"

7.6 KV-7000, KV-8000 Series

: This address can be specified as system data area.

Device	Bit Address	Word Address	32 bits	Remarks
Coil	00000 - 65535	-----	H / L	
Input	00000 - 65535	-----		*1
Holding register	-----	00000 - 65535		
Input register	-----	00000 - 65535		*1

*1 Write disable.

NOTE

- Refer to the GP-Pro EX Reference Manual for system data area.

  Cf. GP-Pro EXReference Manual "LS Area (Direct Access Method Area)"

- Refer to the precautions on manual notation for icons in the table.

  ☞ "Manual Symbols and Terminology"

7.7 CP Series

: This address can be specified as system data area.

Device	MODBUS Address	Address Specified in Modbus-RTU Commands	Corresponding CP2E I/O Memory Address
Discrete Input	-----	-----	-----
Coil	0001 - 2048	0000 - 2047	W000.00 - W127.15
Input register	-----	-----	-----
Holding register	0001 - 4096	0000 - 4095	D0000 - D4095*1
	0001 - 8192	0000 - 8191	D0000 - D8191*2
	00001 - 16384	00000 - 16383	D00000 - D16383*3

*1 CP2E-E□□-type

*2 CP2E-S□□-type

*3 CP2E-N□□-type

NOTE

- Refer to the GP-Pro EX Reference Manual for system data area.

  Cf. GP-Pro EXReference Manual "LS Area (Direct Access Method Area)"

- Refer to the precautions on manual notation for icons in the table.

  ☞ "Manual Symbols and Terminology"

7.8 FP0H Series

: This address can be specified as system data area.

Device	MODBUS Reference No.	Data on BUS (Hexadecimal)	FP0H Device No.
Coil	000001 - 001760	0000 - 06DF	Y0000 - Y109F
	002049 - 010240	0800 - 27FF	R0000 - R511F
Input	100001 - 101760	0000 - 06DF	X0000 - X109F
Holding register	400001 - 465533	0000 - FFFC	DT00000 - DT65532
Input register	300001 - 300128	0000 - 007F	WL000 - WL127
	302001 - 302256	07D0 - 08CF	LD000 - LD255

NOTE

- Refer to the GP-Pro EX Reference Manual for system data area.

  Cf. GP-Pro EXReference Manual "LS Area (Direct Access Method Area)"

- Refer to the precautions on manual notation for icons in the table.

  ☞ "Manual Symbols and Terminology"

7.9 FR-A800, FR-F800, A800Pluse Series

: This address can be specified as system data area.

Device	Bit Address	Word Address	32 bits	Remarks
Device0: Coil	-----	-----	L / H or H / L	1
Device1: Discrete Input	-----	-----		1 *1
Device3: Input register	-----	-----		Bit 15 *1
Device4: Holding register	400001 - 409999	400001 - 409999		*2

*1 Write disable.

*2 If the inverter type is FR-A820-0.4k-1, the maximum address will be 45499.

NOTE

- Refer to the GP-Pro EX Reference Manual for system data area.

  Cf. GP-Pro EXReference Manual "LS Area (Direct Access Method Area)"

- Refer to the precautions on manual notation for icons in the table.

  ☞ "Manual Symbols and Terminology"

7.10 FR-E800 Series

: This address can be specified as system data area.

Device	Bit Address	Word Address	32 bits	Remarks
Device0: Coil	-----	-----	L/H or H/L	÷16+1
Device1: Discrete Input	-----	-----		÷16+1 *1
Device3: Input register	-----	-----		Bit 15 *1
Device4: Holding register	400001 - 409999	400001 - 409999		*2

*1 Write disable.

*2 If the inverter type is FR-A820-0.4k-1, the maximum address will be 405999.

NOTE

- Refer to the GP-Pro EX Reference Manual for system data area.

  Cf. GP-Pro EXReference Manual "LS Area (Direct Access Method Area)"

- Refer to the precautions on manual notation for icons in the table.

  ☞ "Manual Symbols and Terminology"

7.11 ACD-13A, ACR-13A Series

: This address can be specified as system data area.

Device	Bit Address	Word Address	32 bits	Remarks
Holding register	400002,00 - 408280,15	400002 - 408280	L / H	

NOTE

- Refer to the GP-Pro EX Reference Manual for system data area.

  Cf. GP-Pro EXReference Manual "LS Area (Direct Access Method Area)"

- Refer to the precautions on manual notation for icons in the table.

  ☞ "Manual Symbols and Terminology"

7.12 BCD2R00-06, BCR2R00-06

: This address can be specified as system data area.

Device	Bit Address	Word Address	32 bits	Remarks
Input register	300257,00 - 300276,15	300257 - 300276	L / H	
Holding register	400002,00 - 404144,15	400002 - 404144		

NOTE

- Refer to the GP-Pro EX Reference Manual for system data area.

  Cf. GP-Pro EXReference Manual "LS Area (Direct Access Method Area)"

- Refer to the precautions on manual notation for icons in the table.

  ☞ "Manual Symbols and Terminology"

7.13 BCS2R00-06

: This address can be specified as system data area.

Device	Bit Address	Word Address	32 bits	Remarks
Input register	300257,00 - 300276,15	300257-300276	L / H	
Holding register	400002,00 - 404123,15	400002-404123		

NOTE

- Refer to the GP-Pro EX Reference Manual for system data area.

  Cf. GP-Pro EXReference Manual "LS Area (Direct Access Method Area)"

- Refer to the precautions on manual notation for icons in the table.

  ☞ "Manual Symbols and Terminology"

7.14 PCA1 Series

: This address can be specified as system data area.

Device	Bit Address	Word Address	32 bits	Remarks
Holding register	400002,00 - 432513,15	400002 - 432513	L / H	

NOTE

- Refer to the GP-Pro EX Reference Manual for system data area.

Cf. GP-Pro EXReference Manual "LS Area (Direct Access Method Area)"

- Refer to the precautions on manual notation for icons in the table.

☞ "Manual Symbols and Terminology"

7.15 PCB1 Series

: This address can be specified as system data area.

Device	Bit Address	Word Address	32 bits	Remarks
Data item	400002,00 - 436878,15	400002 - 436878	L / H	

NOTE

- Refer to the GP-Pro EX Reference Manual for system data area.

  Cf. GP-Pro EXReference Manual "LS Area (Direct Access Method Area)"

- Refer to the precautions on manual notation for icons in the table.

  ☞ "Manual Symbols and Terminology"

7.16 QTC1-4 Series

: This address can be specified as system data area.

Device	Bit Address	Word Address	32 bits	Remarks
Holding register	400001,00 - 401325,15	400001 - 401325	L / H	

NOTE

- Refer to the GP-Pro EX Reference Manual for system data area.

  Cf. GP-Pro EXReference Manual "LS Area (Direct Access Method Area)"

- Refer to the precautions on manual notation for icons in the table.

  ☞ "Manual Symbols and Terminology"

7.17 QMC1 Series

: This address can be specified as system data area.

Device	Bit Address	Word Address	32 bits	Remarks
Holding register	400001,00 - 464128,15	400001 - 464128	L / H	

NOTE

- Refer to the GP-Pro EX Reference Manual for system data area.

Cf. GP-Pro EXReference Manual "LS Area (Direct Access Method Area)"

- Refer to the precautions on manual notation for icons in the table.

☞ "Manual Symbols and Terminology"

8 Device Code and Address Code

Use device code and address code when you set "Device Type & Address" for the address type of the data display or other devices.

Device	Device Name	Device Code (HEX)	Address Code
Coil	0	0080	Value of (word address -1) divided by 16
Discrete Input	1	0081	Value of (word address -1) divided by 16
Input Register	3	0001	Value of (word address - 1)
Holding Register	4	0000	Value of (word address - 1)
Input Register	D3	0002	Value of (word address -1) divided by 2
Holding Register	D4	0003	Value of (word address -1) divided by 2

9 Error Messages

Error messages are displayed on the screen of Display as follows: "No. : Device Name: Error Message (Error Occurrence Area)". Each description is shown below.

Item	Description
No.	Error Number.
Device Name	Name of the External Device where an error has occurred. The Device name is the title of the External Device set with GP-Pro EX.(Initial value [PLC1])
Error Message	Displays messages related to an error that has occurred.
Error Occurrence Area	Displays the IP address or device address of the External Device where an error has occurred, or error codes received from the External Device. NOTE • IP address is displayed as "IP address (Decimal): MAC address (Hex)". • Device address is displayed as "Address: Device address". • Received error codes are displayed as "Decimal [Hex]".

Display Examples of Error Messages

"RHAA035: PLC1: Error has been responded for device write command (Error Code: 2[02H])"

NOTE

- Refer to your External Device manual for details on received error codes.
- Refer to "Display-related errors" in "Maintenance/Troubleshooting Guide" for details on the error messages common to the driver.

■ Error Codes Specific to the External Device

Please refer to the manual of the External Device for error codes specific to the External Device.

General MODBUS error codes are shown below.

Error Code (HEX)	Description
01	Does not support the corresponding Function Code.
02	The specified data address does not exist.
03	Data value error.

■ Error Messages Specific to the External Device

Error Number	Error Message	Description
RHxx128	(Node Name): (Device Address) can't be read because of the limitation of the Read boundary	When reading the coil or discrete input as a word address while the boundary is less than 16 bits, or accessing the input or holding register as a double word while the boundary is set to 1 word, an error will be displayed.
RHxx129	(Node Name): (Device Address) can't be written because of the limitation of the Write boundary	When writing the coil as a word address while the boundary is less than 16 bits, or accessing the holding register as a double word while the boundary is set to 1 word, an error will be displayed.
RHxx130	(Node Name): (Device Address) is not defined on Function Code and Max Query setting	When accessing the device out of the defined area, an error will be displayed.
RHxx131	(Node Name): (Device Address) can't be read because of the limitation of the Device Range setting	When reading the coil or discrete input as a word address while the range is less than 16 bits, or accessing the input or holding register as a double word while the range is set to 1 word, an error will be displayed.
RHxx132	(Node Name): (Device Address) can't be written because of the limitation of the Device Range setting	When writing the coil as a word address while the range is less than 16 bits, or accessing the holding register as a double word while the range is set to 1 word, an error will be displayed.